WORLD OF DISCOVERY

COMPUTER LOGIC LAB

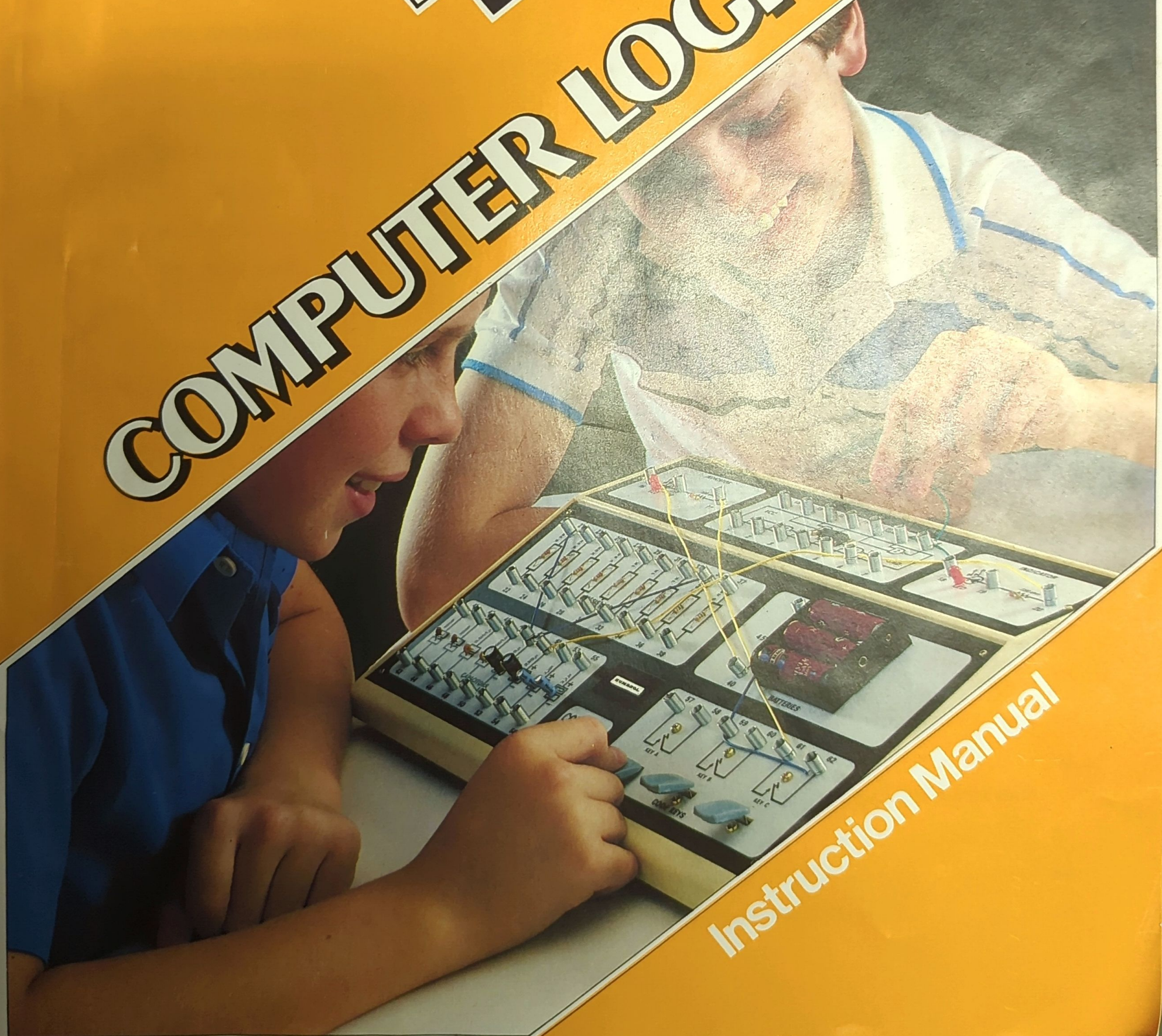

Instruction Manual

CONTENTS

Components 2
Building The Projects 4
Troubleshooting 5
1. The LED Operation 6
2. Not Gate 7
3. TTL Inverter 8
4. TTL Buffer 9
5. The Application of Buffer 10
6. The AND Gate 11
7. TTL AND Gate 12
8. NAND Gate 13
9. TTL NAND Gate 14
10. OR Gate 15
11. TTL OR Gate 16
12. NOR Gate 17
13. TTL NOT Gate 18
14. TTL Exclusive – OR 19
15. The Comparator 20
16. AND Gate as Enable Function 21
17. NAND Gate as a Comparator 22
18. Line Selector 23
19. The Source Selector 24
20. Free-Running Multivibrator 25
21. RS Flip-Flop 26
22. Gated Flip-Flop 27
23. The Monostable Multivibrator 28
24. Frequency Divider 29
25. Heads or Tails 30
26. Electronic Timer 31
27. The Electronic Relay 32
28. Circuit Disconnect Warning Device 33
29. LED Brightness Controller 34
30. Light Control – Using TTL 35
31. Physical Agility Tester 36
32. Charging and Discharging of Capacitors 37
33. Parallel Connections of Capacitors 38
34. Series Connections of Capacitors 39
35. Electric Current Flow in Salt Water . . . 40
36. Water Quality Indicator 41
37. Continuity Tester 42
38. Positive Pulse Generator 43
39. Negative Pulse Generator 44
40. Pulse-Train Generator 45
41. Dek – Dek Sound 46
42. Dek – Dek Sound with Flash Lights . . 47
43. Motor Boat Simulator 48
44. Buzzer 49
45. Buzzer Sounding for A Definite Time 50
46. Sound-Indicating Timer 51
47. Electronic Fish Lure 52
48. Conductivity Tester 53
49. Continuity Tester for Blind 54
50. One-Shot Tone Burst 55
51. Electronic Telephone Bell 56
52. Divide-By-Two 57
53. Four Tone Door Bell 58
54. TTL Buffer as Amplifier 59
55. Visible and Audible AND Gate 60
56. Audible "OR" Gate 61
57. The Half Adder 62
58. Audible & Visible Digital Transmission Gate 63
59. AND – OR Gate 64
60. 4 Input NAND Gate 65

COMPONENTS

Warning: Static Electricity Can Damage Circuit Components. Ground Yourself Before Working on This Console.
There are 25 separate components in your Computer Logic Lab. We will briefly explain the purpose of each component so that you will understand what each component does. This will help you to better understand each of the projects.

RESISTORS

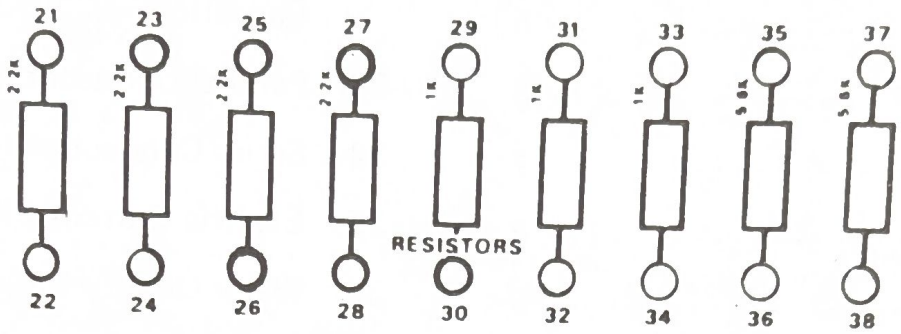

There are 11 resistors in your kit. 9 of them are located on the middle left of the console. The other 2 are located in the upper corners of the console. Resistors are used to limit the amount of electrical current flowing in a circuit. They are also used to set the voltage in different parts of a circuit. The value of a resistor is expressed in Ohms. Generally speaking, in a given circuit the higher the value of a resistor, the lower will be the current flow in the circuit. There are some abbreviations which are used in showing the value of resistors. One of these is the symbol K. The letter K stands for 1,000. A resistor with a resistance of 1,000 Ohms is sometimes called a 1K Ohm resistor. A 10,000 Ohm resistor is called a 10K Ohm resistor. A 5.6K Ohm resistor has a resistance of 5,600 Ohms.
The circuit symbol for a resistor is

CAPACITORS

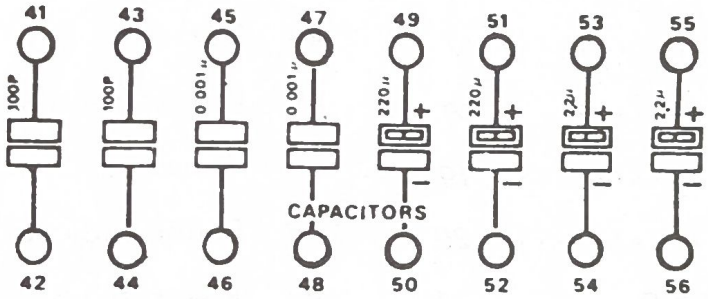

Your kit has eight capacitors. They are located in the lower left corner of the console. They can be used in several ways in an electronic circuit. They can be used to block a direct current (DC) signal while allowing an alternating current (AC) signal to pass through. They can be used to store electrical energy as in a filter to smooth out pulsating signals. They are used to tune electronic circuits to specific frequencies as in radio receiver and transmitter circuits. They are used to control the timing of events in a circuit, which will be the main application in the projects in this kit. The value of capacitors is expressed in units called Farads. The number of Farads is an indication of how much electrical energy can be stored in the capacitor. The larger the value of the capacitor, the more energy it can store. The Farad is a rather large unit and so most capacitors are rated in millionths of Farads, usually called microfarads. Microfarad is abbreviated MFD, µfd, or just µF. Very small capacitors are rated in picofarads (pF). A picofarad is one millionth of a microfarad. The four largest capacitors in your kit are of the electrolytic type, which means they should be connected in a certain way. The terminal must go to the correct part of the circuit. You will be instructed about this in the projects. The circuit symbol for a capacitor is

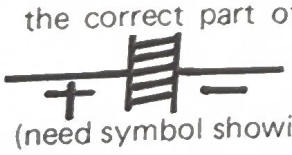

(need symbol showing polarity of elec. capacitor).

KEYS

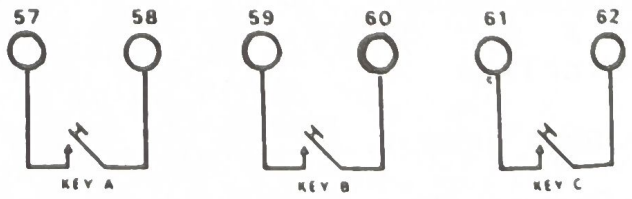

CODE KEYS

There are three key switches in your kit. They are located at the bottom right corner of the console. These key switches are used to control the flow of current in a circuit. When the key is up the switch is open and no current will flow through

the switch. When the key is pushed down to make contact with the bottom terminal the switch is closed and current can flow through the switch. The circuit symbol for this kind of switch is

BATTERIES

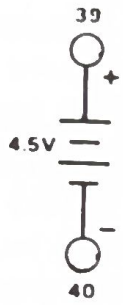

You'll need three type AA, 1½ volt batteries for your kit. Batteries are used to provide the source of electricity, which is necessary for the operation of an electronic circuit. The voltage forces the current to flow through the various components in the circuit. The batteries are located on the middle right of the console.

In your kit the three 1½-volt batteries are connected in series to provide a total of 4½ volts to operate the circuits. The batteries are inserted in the battery holder. When putting the batteries in the holder, be sure to insert them in the right direction (as indicated on the holder). The circuit symbol for the battery is

INDICATORS

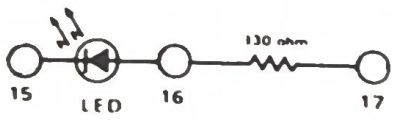

INDICATOR

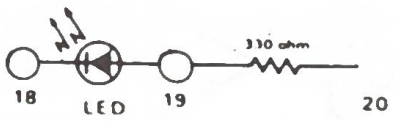

INDICATOR

There are two indicators used in your kit. They are located in the upper corners of the console. Each indicator is a light-emitting diode (LED). A diode is a device which will pass current in one direction but not the other. A light-emitting diode is a special kind of diode which emits light when current is passed through it. The 330-ohm resistor in series with each LED is used to limit the diode current to the proper value when the diode is turned on. The circuit symbol for the LED is

INTEGRATED CIRCUIT

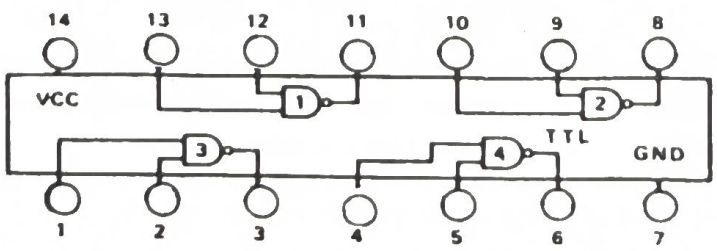

There is one integrated circuit (IC) in your kit. It is located in the top center of the console. An integrated circuit is a special electronic component containing many transistors and resistors in a very small package. The particular IC in your kit is a type 7400 or 7403 or equivalent. They have the same function. The only difference is: When using 7403, you have to add external resistors. However, you don't need to worry about that. All of your circuits were designed, so that you can use 7400 as well as 7403. This IC contains four separate logic NAND gates. You will learn the basic operation of a logic NAND gate as you go through your projects. The IC is the most critical component in your kit and the most easily damaged. For this reason it should always be the last component connected into the circuit. The positive supply lead to pin 14 of the IC should always be the last connection made when hooking up the various projects. The circuit symbol for an IC depends on the kind of circuit it contains. The symbol for a two-input NAND gate is

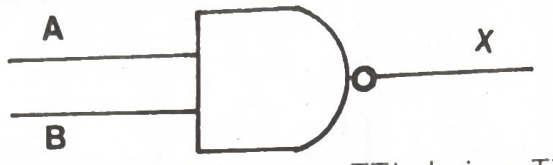

The IC in your kit is part of a logic family of ICs known as TTL devices. TTL stands for Transistor-Transistor Logic. This refers to the types of components involved in the internal circuits of the ICs. The majority of TTL devices have type numbers which begin with 74. The IC in your kit as a 7400 or 7403. All TTL devices have certain common characteristics. They are all designed to operate with approximately 5 volts. In your kit you will be using three 1½ volt cells in series to provide a total of 4½ volts. In order for the IC to function properly, you must connect pin 7 to the circuit ground or common (negative terminal of the battery) and pin 14 to the battery positive terminal. The circuit diagrams showing how various logic circuits are to be connected together do not show these two power supply connections. They are understood to be necessary even though they do not appear on the circuit diagram.

ICs come in several different case styles. Some are packaged in small round metal cases with the leads arranged in a circular pattern on the bottom of the case. This type of case is described as a T0-5 case. Your IC is in a very common package known as a DIP. DIP stands for Dual In-line Package. The IC leads are arranged in two (dual) parallel sections along the sides (in-line) of the package. ICs are available in DIP packages with 8, 14, 16, 24 and 40 pins or leads. Your IC is in a package commonly referred to as a 14-pin DIP.

EARPHONE

This is a device which convert electric signals to acoustic vibrations. It is used, inserted in the ear. There are the magnetic type and the crystal type of earphones. This kit uses the magnetic type earphone.

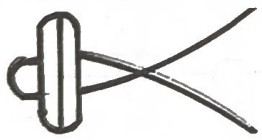

BUILDING THE PROJECTS

Battery installation

As previously mentioned, your kit uses three AA 1½ volt penlight batteries to power the projects. Install them in the holder adjacent to terminals 39 and 40. Be sure to observe the polarity (+, -) markings inside the holders. The + end of the cell is the one with the small metal cap. Be sure the batteries are firmly seated in the holders. In order to make the batteries last longer don't leave the circuit on longer than necessary to complete the project and be sure to disconnect the batteries from the circuit when each project is completed.

Wiring

The spring terminals and the pre-cut hookup wires supplied with your lab kit make it a snap to wire together the various projects. To connect a hookup wire to a spring terminal, just bend the spring over to one side and inset the wire into the opening. Sometimes two or three hookup wires are connected to a single spring terminal so make sure the first wire doesn't come loose when the second and third wires are installed. The easiest way to do this is to push the spring on the side opposite where the first wire has already been inserted.

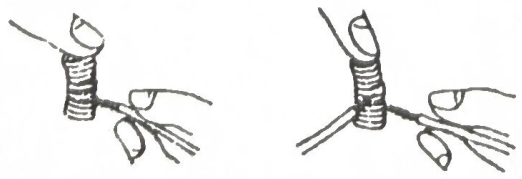

Be sure that only the exposed, shiny part of the hookup wire is inserted into the spring terminal. If the plastic insulation part of the wire is inserted into the spring terminal, electrical contact will not be made. To remove the hookup wires from the spring terminals, just bend each terminal and pull the wires from it.

Project Instructions

Each project has an explanation of its purpose and application along with a description of the basic circuit operation.

Included is a schematic diagram of the circuit which will allow you to begin learning about electronic schematics. A layout of the kit board is included to show the various connections. Just a brief word about the schematic or circuit diagrams. When two wires cross on the schematic diagram and they are to be connected together as shown below.

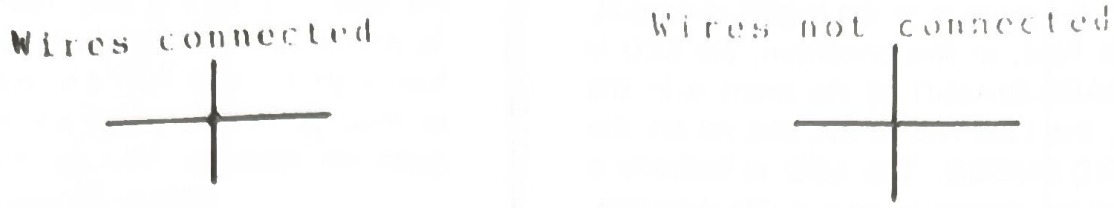

There is a simple wire sequence listing for each project. You should connect an appropriate length wire (whatever color wire will reach) between the terminals listed in each grouping. When you come to a new grouping, start new connections. For example, Project #1 has the following wire sequence listing: 15-40, 17-61, 39-62
You should connect a wire between 15 and 40. Another between 17 and 61. Another between 39 and 62.
If there are three terminal numbers in a grouping such as 6-22-31, you would connect one wire from 6 to 22 and another from 22 to 31.

CAUTION: As mentioned previously, the power connection to the IC (pin 14) is left till last. It is important that you make this connection last. With some circuits you may damage the IC if this precaution is not observed. And when you disconnect leads, start by disconnecting pin 14 connection first.

TROUBLESHOOTING

If you assemble each project according to its wire sequence listing, you should have no problem getting the projects to work properly. But if you do have a problem, you can usually find and correct it by using the following troubleshooting steps. These steps are very similar to those used by electronics technicians in troubleshooting electronic equipment.

1. Are the batteries fresh? If not, they may be too weak to power the project. This is particularly true of TTL circuitry; if the batteries are weak, some functions may be erratic. To Assure Consistent Operation, Use Only Fresh 1.5 volt, AA Batteries.
2. Have you assembled the project properly? If everything else checks out OK, check all the wiring connections to make sure you have wired all the terminals correctly. Sometimes it's a good idea to have someone else take a look at it too — a second pair of eyes may see something you have overlooked.
3. How about following the Schematic Diagram and circuit explanation? As you progress in your knowledge and understanding of electronics, you should be able to do some troubleshooting just by following a Schematic, and if some circuit details are provided, you should be able to figure it out for yourself.
4. Try some voltage and current measurements — you will soon find out how handy a voltage — ohm meter (VOM) can be to an electronics technician!

1. THE LED OPERATION

LED is an abbreviation for Light-Emitting Diode. It is used as the indicator to sense the condition of a particular point. If the point is in the logic 1 condition, the LED will emit light. In this condition, the LED is said to be FORWARD-BIASED. If the point is in the logic 0 condition, the LED will be off, and we say the LED is REVERSED-BIASED. The LED is basically a diode, thus it conducts electricity only in one direction. The difference between LED and diode is that when conducting, the LED will emit light but a diode will not emit light.

Follow the layout diagram and the wire sequence listing and connect the wires carefully. The LED should emit light when you push key C. Release the key, cutting off the current, and the LED will be off.

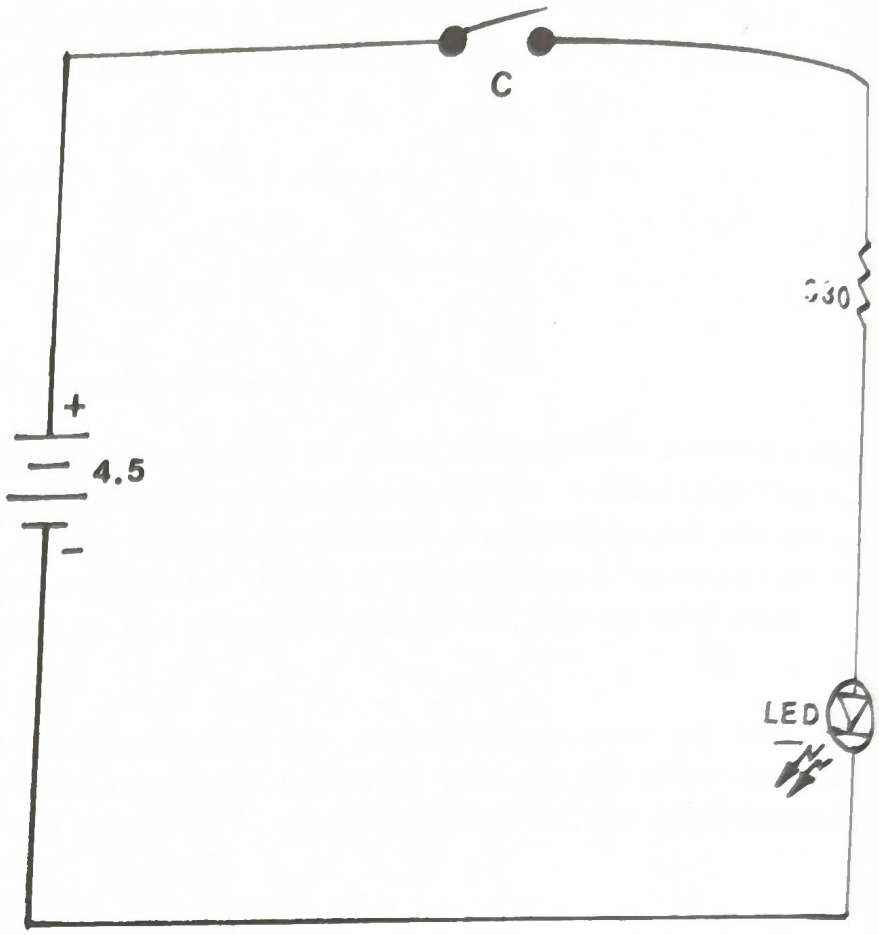

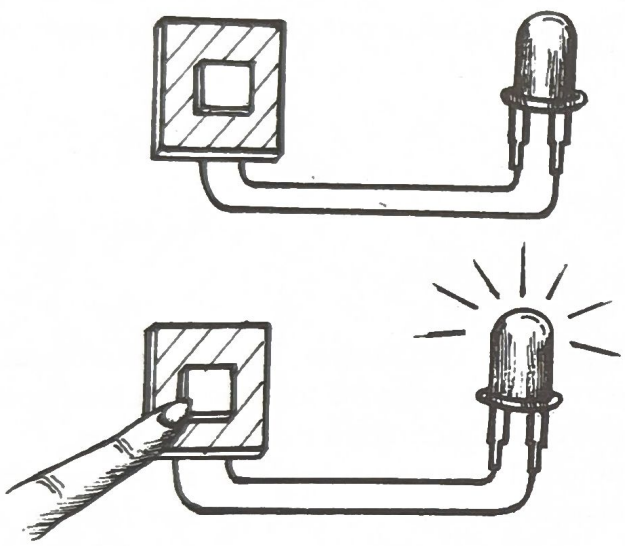

Wire Sequence

15–40
17–61
39–62

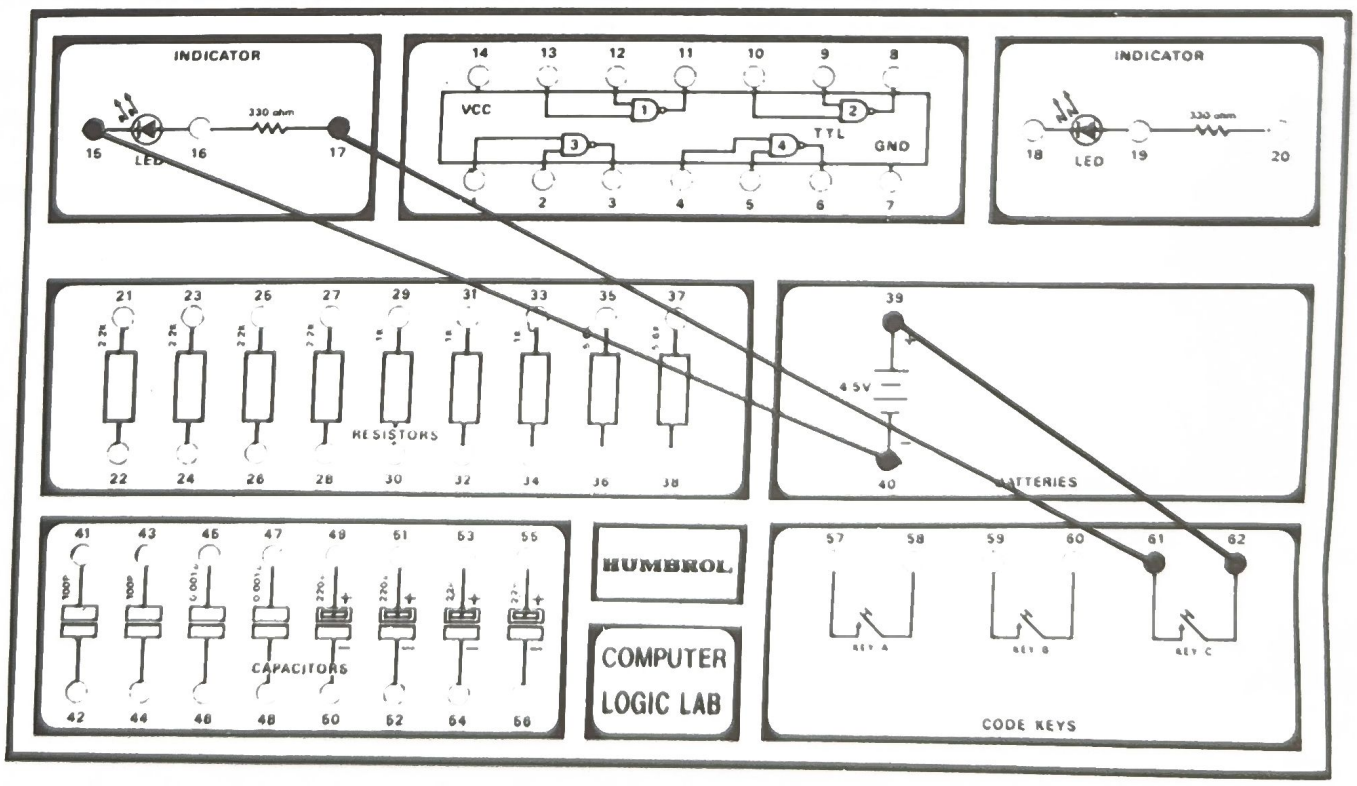

2. NOT GATE

This basic logic function is the invert operation, it has only one input. The NOT gate is used to change the logic state at its input to the opposite one at its output. For example, if the input of a NOT gate is 1, its output will be 0, if input is 0, the output will be 1. Look at the circuit, the key and the LED represent the input and output to the NOT gate respectively.

After connecting the wires carefully, the LED should be on. When pushing the key, the LED should be off.

You should note, that one of the ways in which logic operation is visualized is by using truth table mentioned in the introduction, from your own observation, fill in the truth table below.

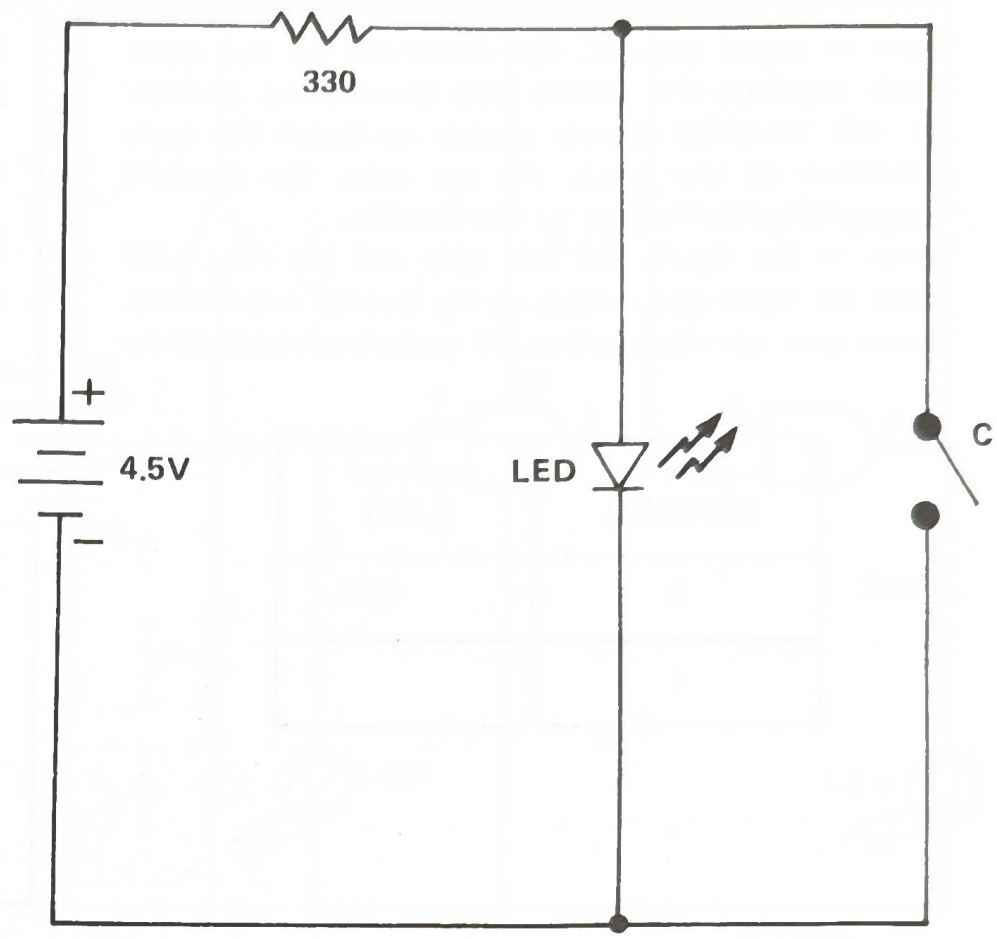

INPUT (SWITCH)	OUTPUT (LED)
0	
1	

NOTE:

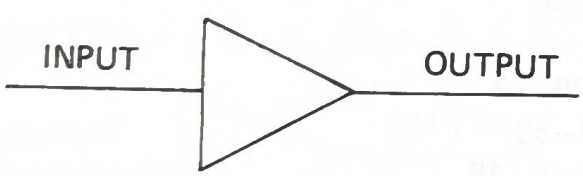

Wire Sequence:

39–17
15–40–61
16–62

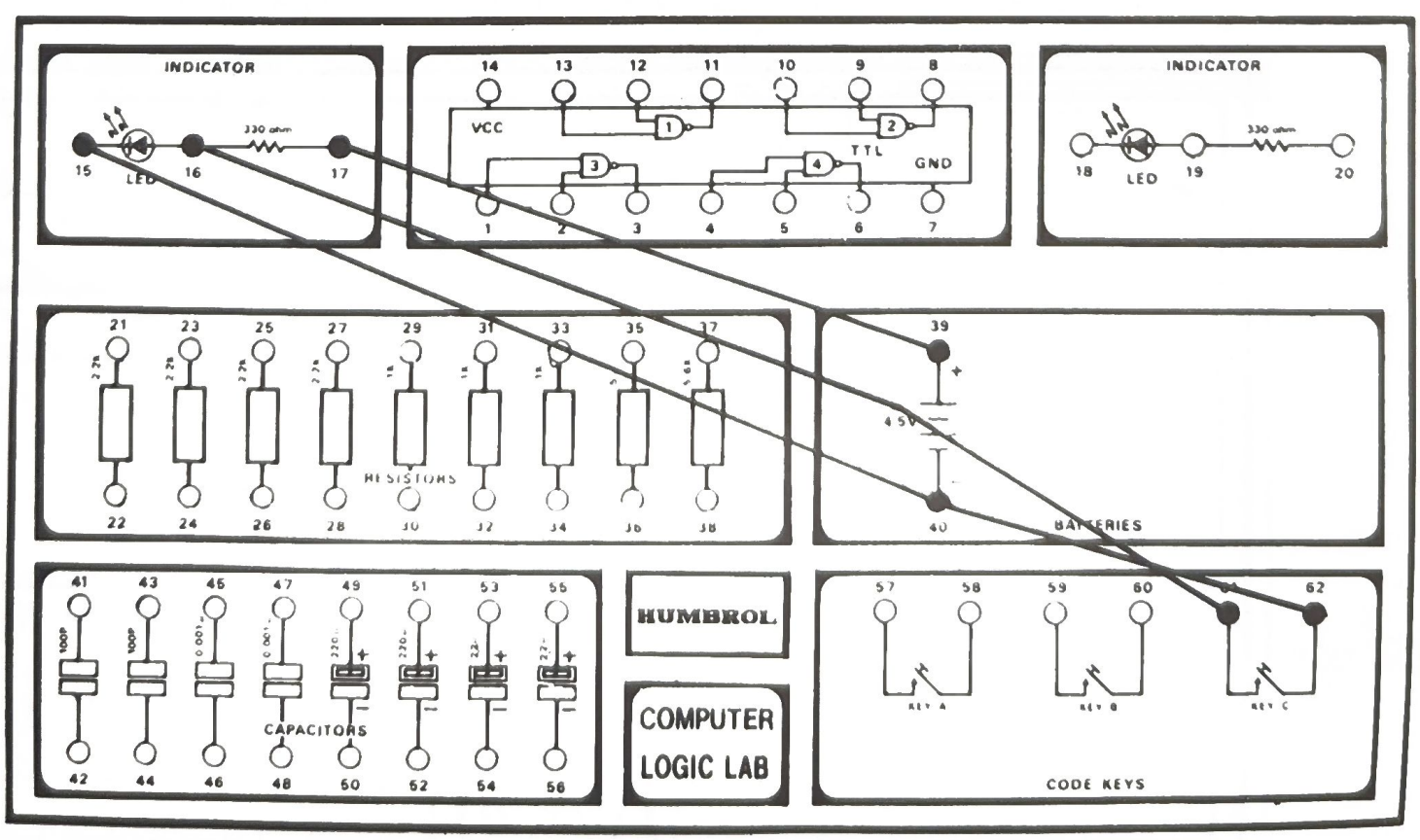

3. TTL INVERTER

TTL is the abbreviation for Transistor Transistor Logic, a type of digital logic IC. By connecting the two input leads together, the NAND gate becomes an inverter. In this way, the circuit is able to invert the logic condition at the input. At the note, the standard triangular symbol is used for the inverter.

Look at the figure, the left LED and the right LED state for input and output to the inverter respectively. From your own observation, fill in the truth table below

INPUT (SWITCH)	OUTPUT (LED)
0	
1	

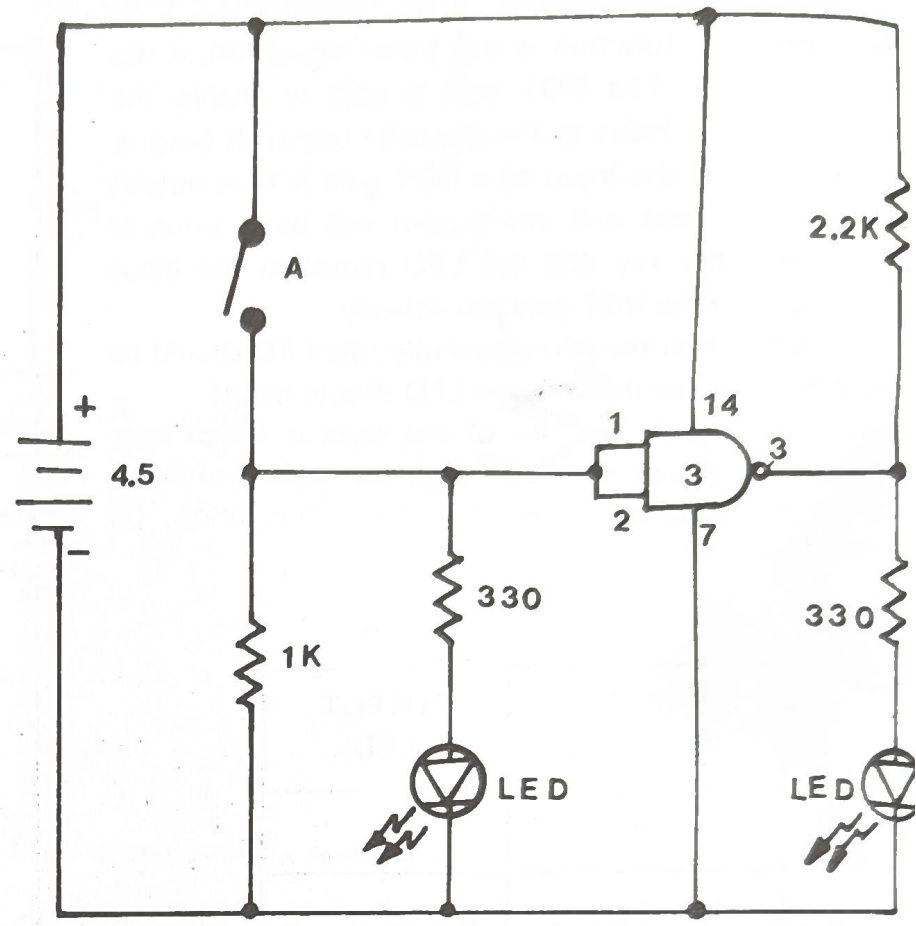

NOTE:

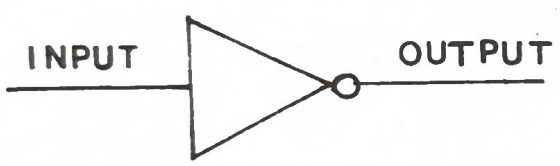

Wire Sequence

2–1–17–29–57
14–22–39–58
15–30–40–7 – 18
20– 3– 21

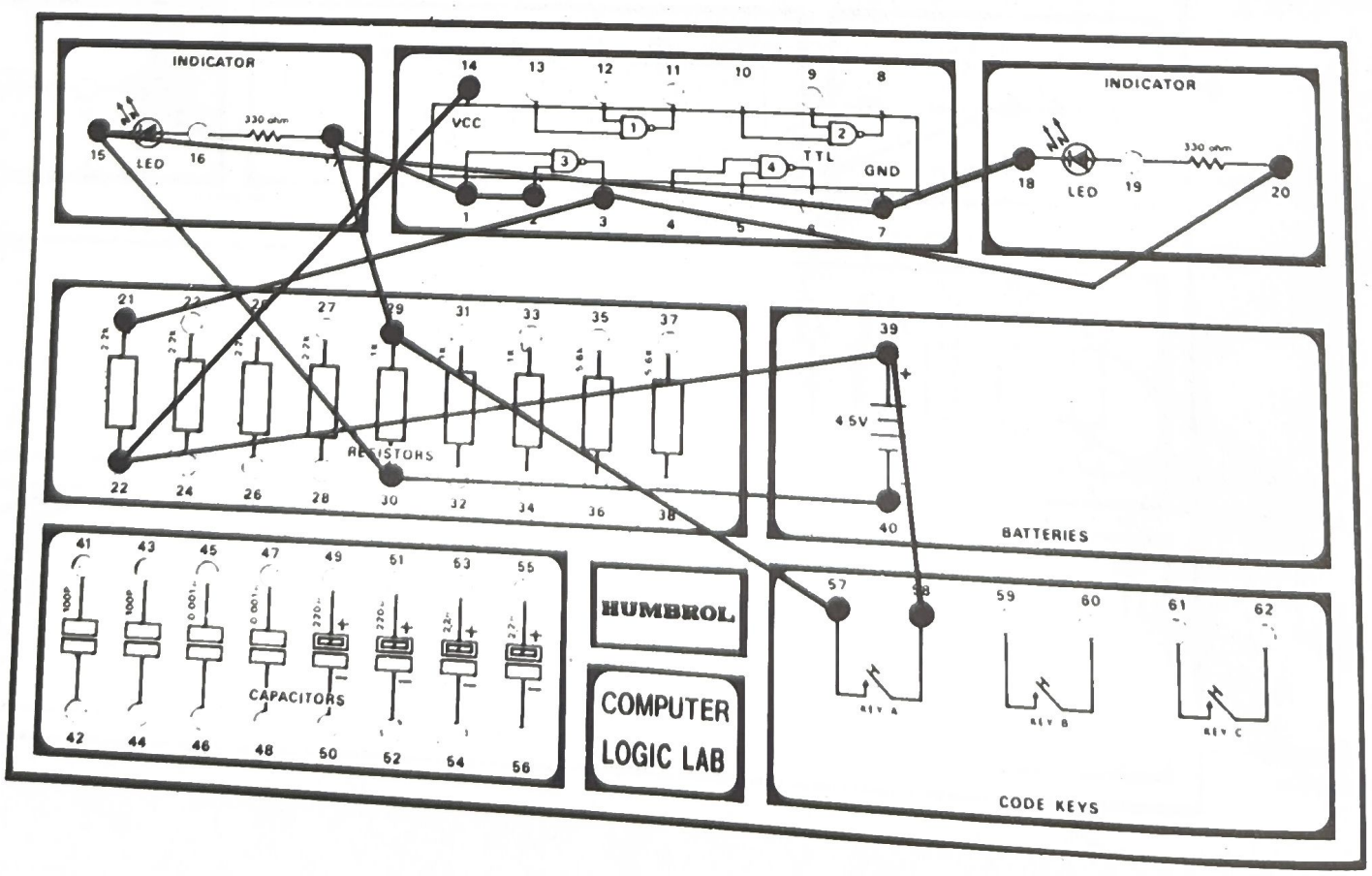

4. TTL BUFFER

In the previous project, we learned how the inverter operates. In addition, the inverter stage provides some separation between different parts of a digital circuit, and is refered to as an inverting buffer. But, there are times we need a buffer but we don't want to invert the logic state so a non-inverting buffer is used. In a non-inverting buffer the logic state at the output is the same as the input but the circuit provides the necessary separation between certain parts of a circuit.

The triangular symbol at the note is used for the non-inverter buffer. (what is the difference with the inverter one?)

Look at the figure, the left LED and the right LED stand for input and output to the buffer respectively. From your own observation, fill in the truth table below.

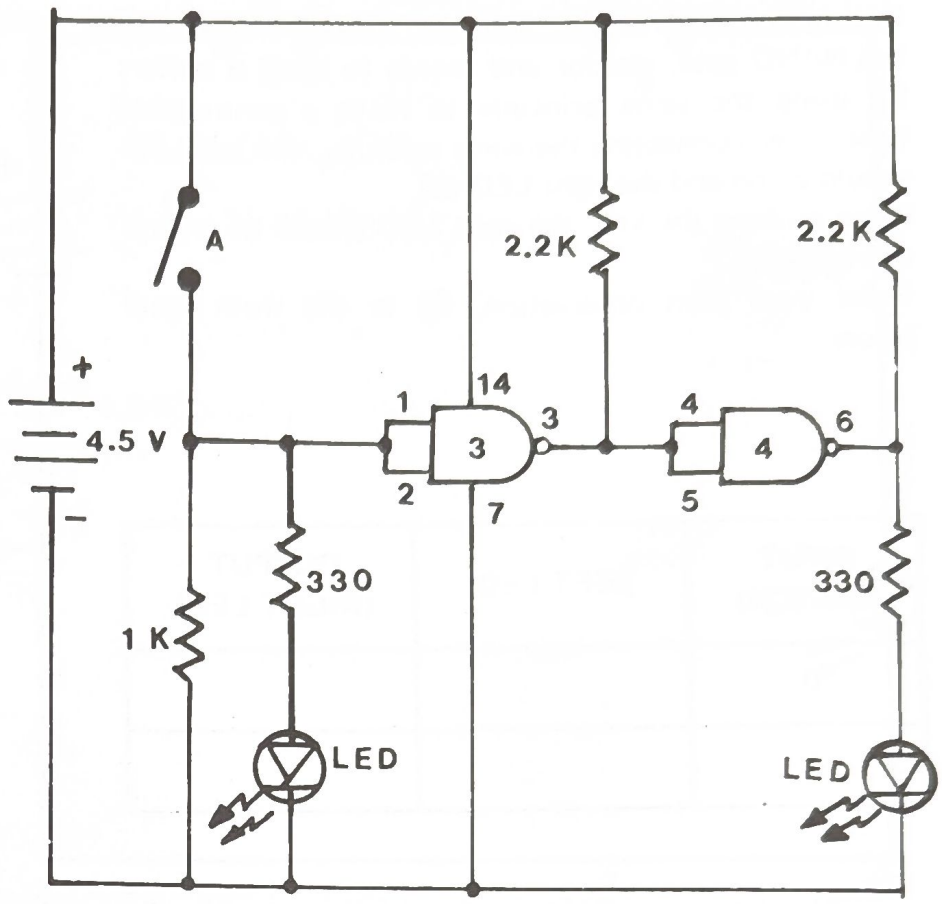

INPUT (LEFT LED)	OUTPUT (RIGHT LED)
0	
1	

NOTE:

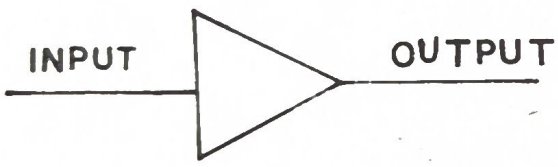

Wire Sequence

2–1–17–29–57
5–4–3–27
14–26–28–39–58
18–7–40–30–15
20–6–25

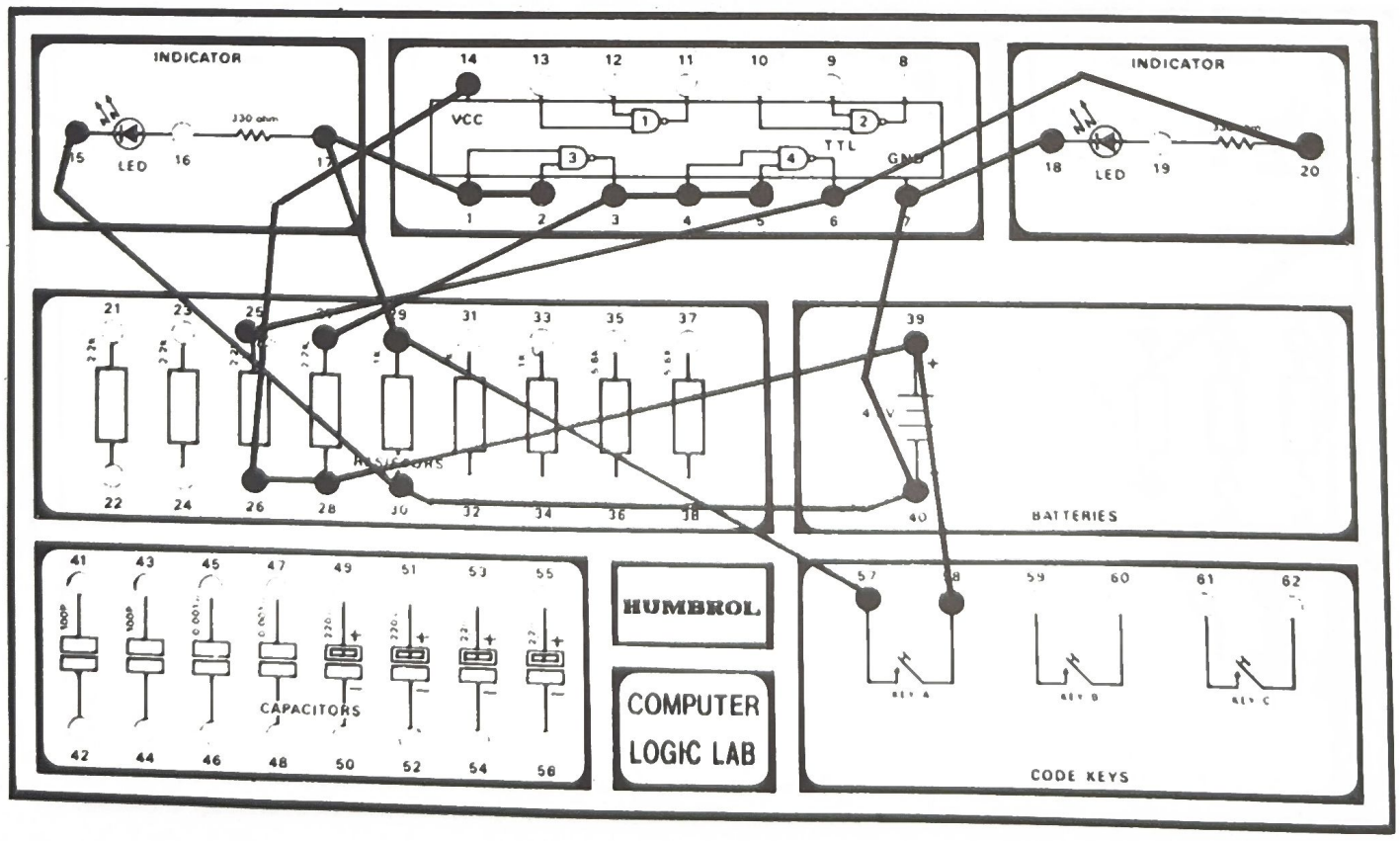

5. THE APPLICATION OF BUFFER

In previous experiments, you have learned how to use the NAND gate, resistor and switch to build a buffer. By using the same principle to make a controllable light, after connecting the wires carefully, the left LED should be on and the right LED off.
When pushing the key, the right LED should be on and left LED off.
From your own observation, fill in the truth table below.

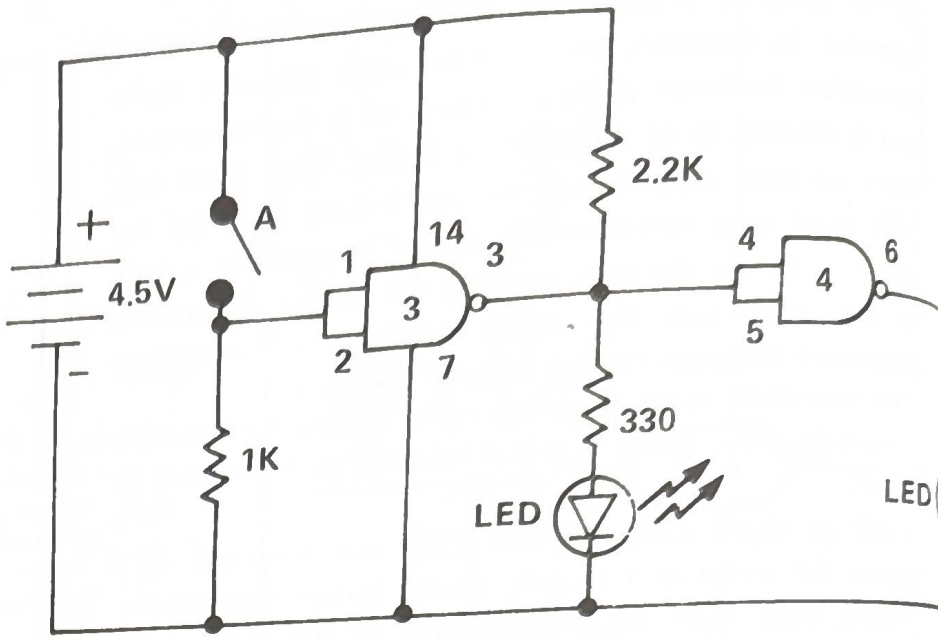

INPUT (SWITCH)	LEFT LED	OUTPUT (RIGHT LED)
0		
1		

Wire Sequence

15–34–40–7–18
17–28–3–4–5
1–2–33–57
14–27–39–58
6–20

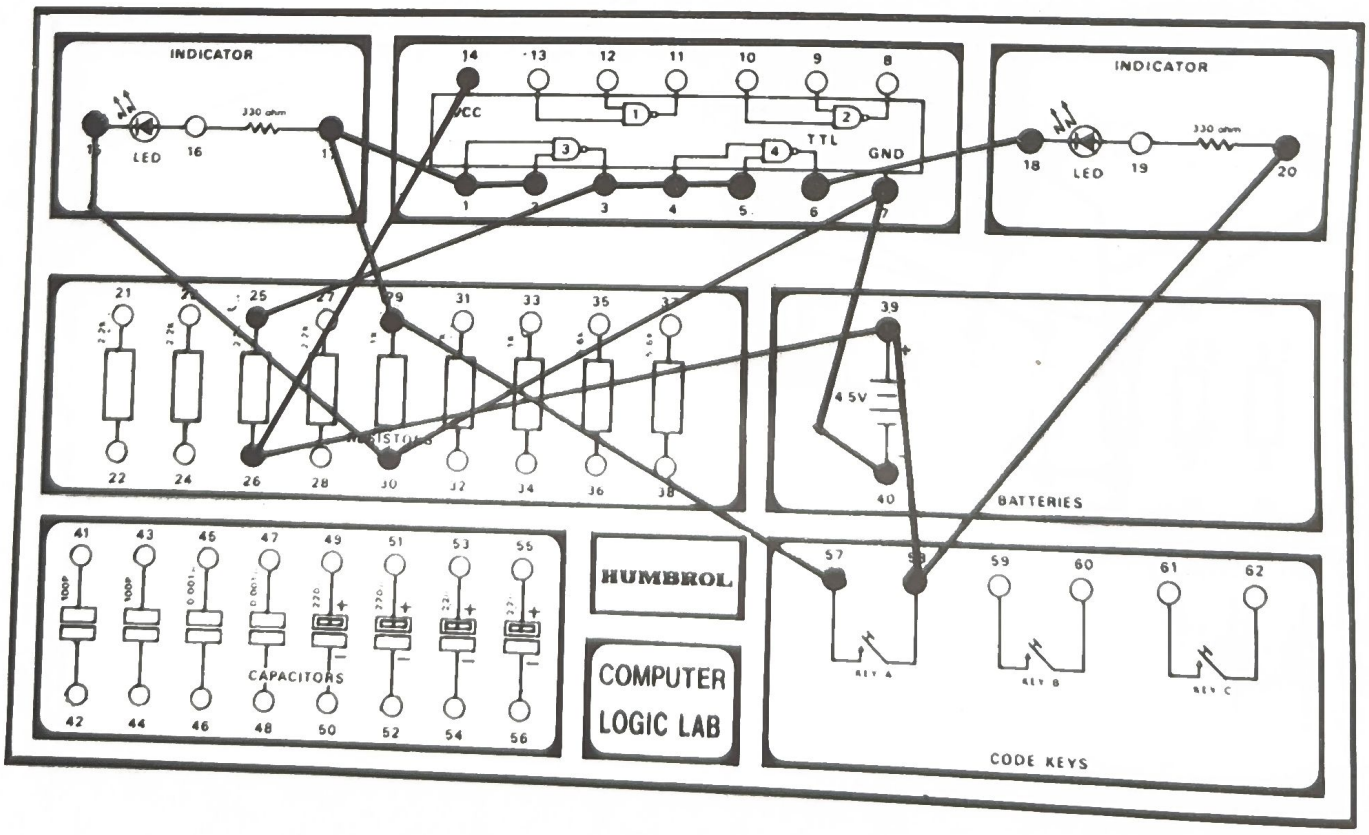

6. THE AND GATE

The AND gate is one of the basic logic functions. In order to have a logic 1 output, both the input terminals of the two-input AND gate must be logic 1. If either or both the inputs are logic 0, the output will be logic 0.

This logic operation is expressed by logic equation X=AxB, which is read "X is equal to A and B". X is the output and A and B are inputs. Sometimes a dot is used to indicate the AND operation and sometimes no symbol is used, but the AND operation is implied as shown follow: X=AxB=A.B=AB. The symbol at the note is the symbol for AND gate operation.

Follow the layout diagram and the wire sequence listing and connect the wires carefully. From your own observation, fill in the truth table below.

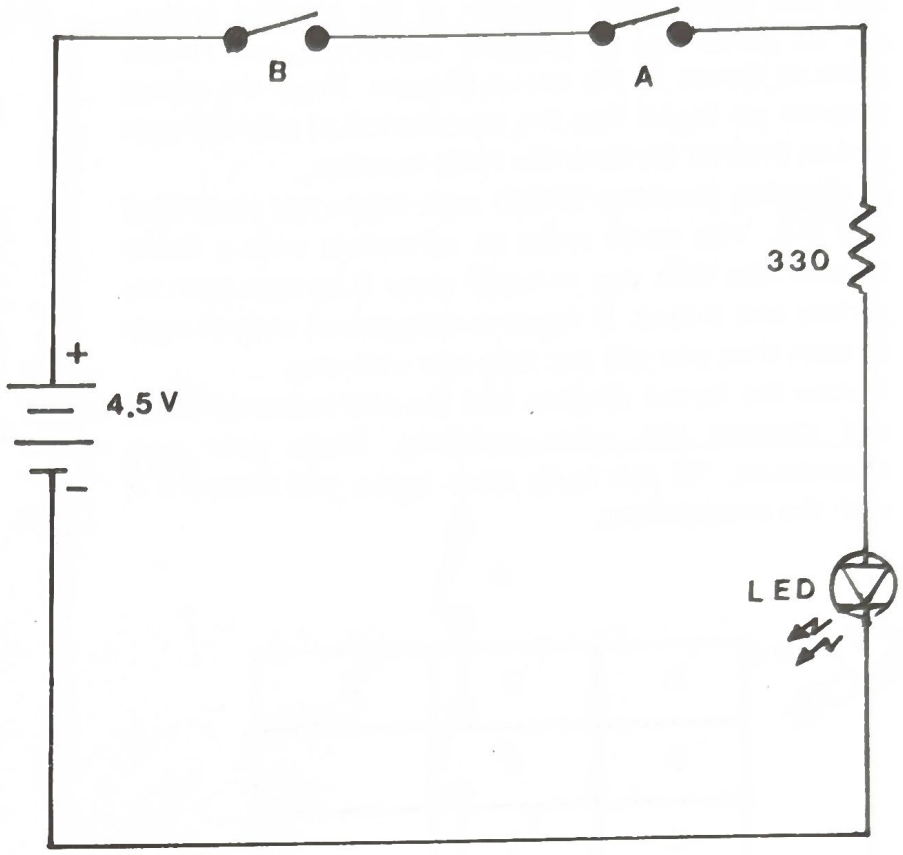

A	B	X
0	0	
0	1	
1	0	
1	1	

NOTE :

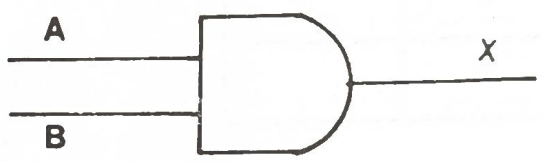

Wire Sequence 15–40
17–57
39–60
58–59

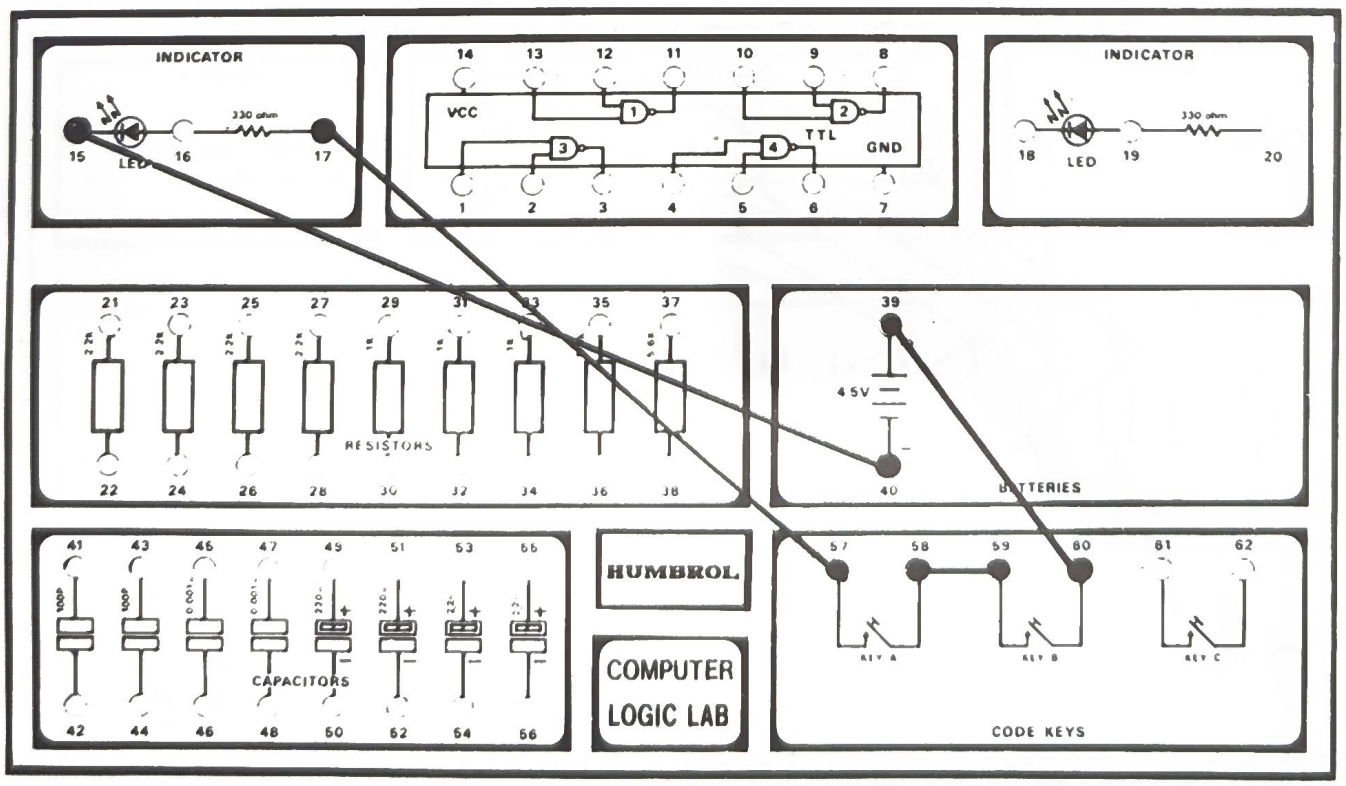

7. TTL AND GATE

The two inputs AND function of the previous project can be performed by properly connecting two NAND gates as shown in the circuit diagram. From the circuit diagram we found that the conbination of a NAND gate and an inverter perform the AND function.

A situation involving NAND logic might run something like this. You could make an agreement with a friend to take him with you to a ball game if he pays both his carfare and tricket. If the pays only one of both or none of both then you will not take him with you.

Follow the layout diagram and the wire sequence listing and connect the wires carefully. From your own observation, fill the truth table below and compare it with the previous one.

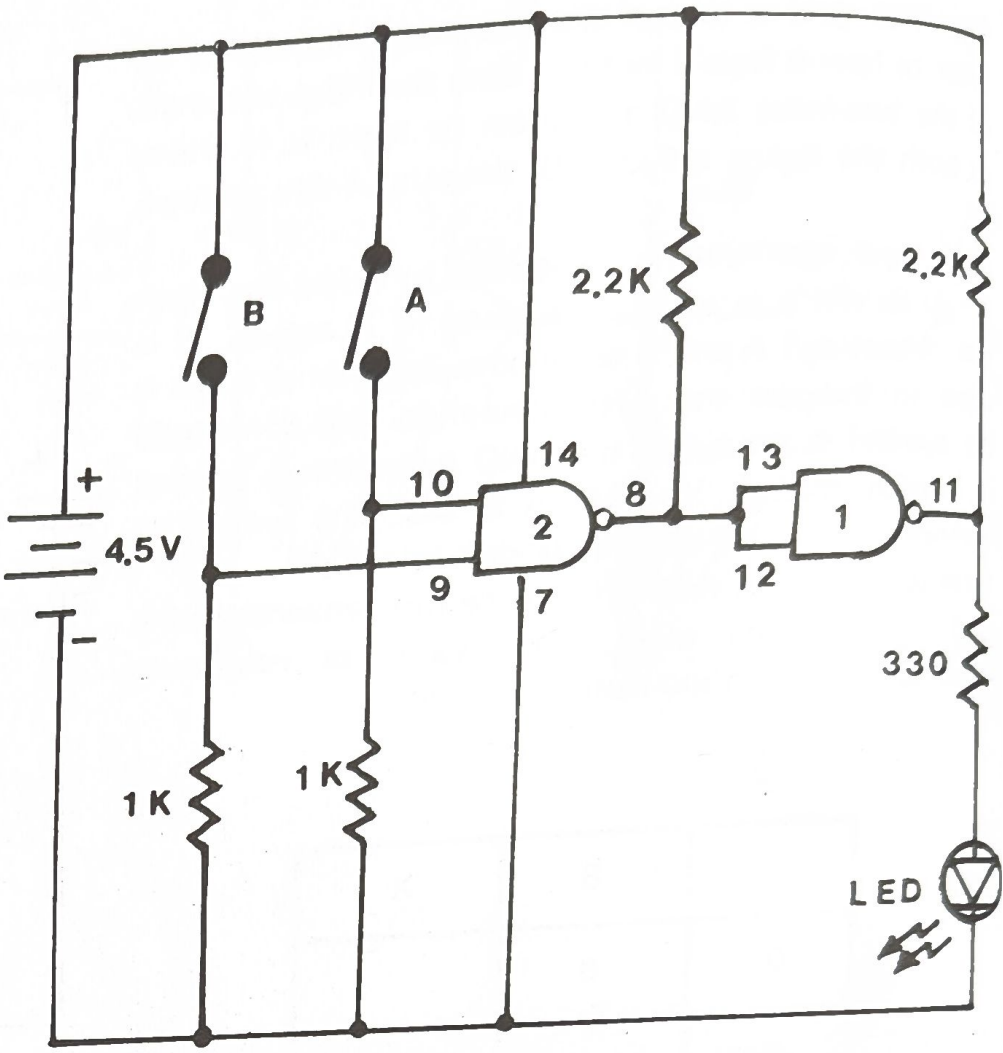

A	B	X
0	0	
0	1	
1	0	
1	1	

Wire Sequence

7–40–32–30–15
8–12–13–25
9–31–59
10–29–57
11–27–17
26–28–14–39–58–60

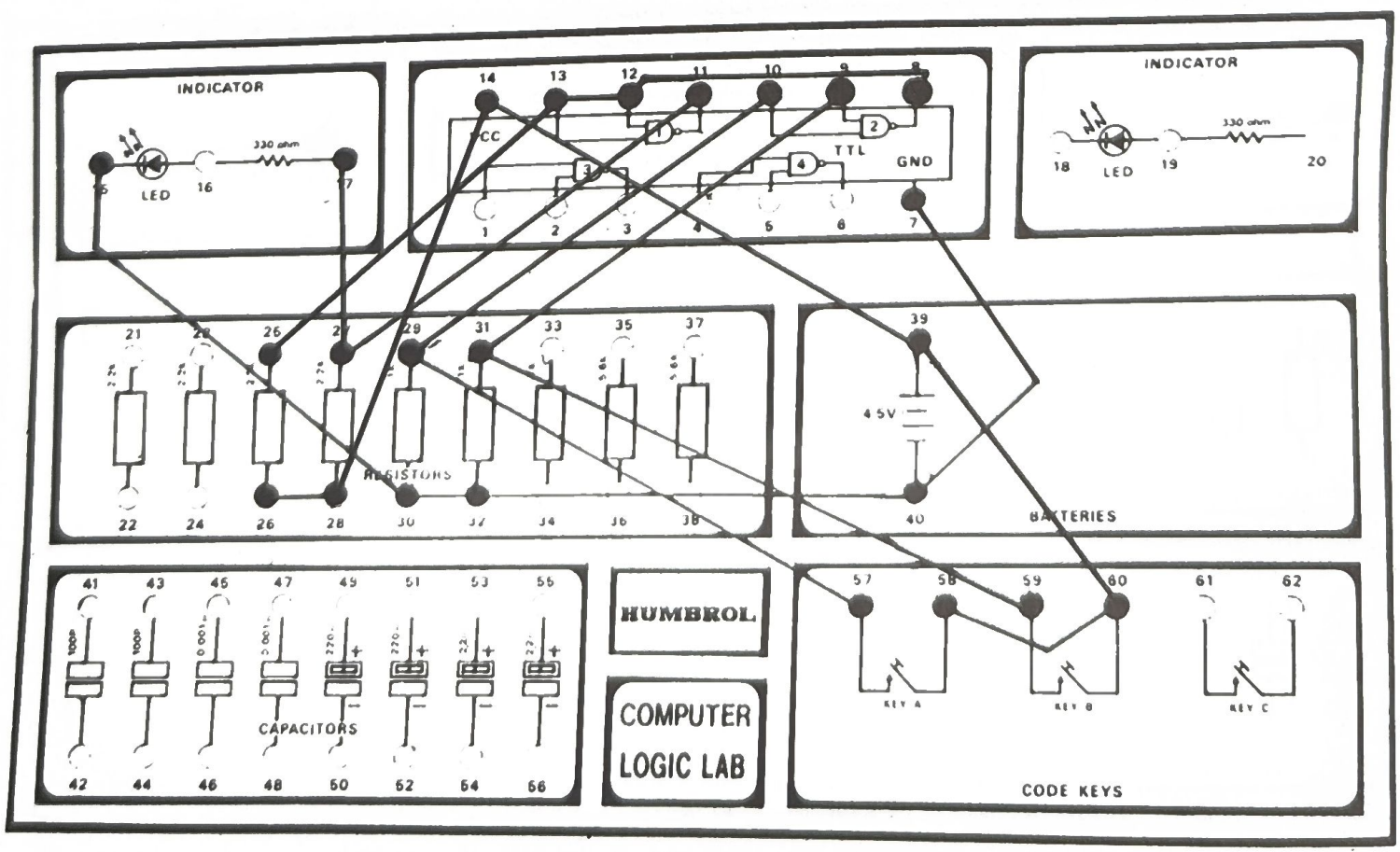

8. NAND GATE

The NAND operation is another kind of the basic logic function, and is exactly opposite to the AND function you studied in the four previous projects.
Look at the circuit, with both switches open, that is logic 0, the LED is on, indicating a logic 1. If either switch A or switch B is closed, the LED is still on. If both switch A and switch B are closed, the LED will go out.
The logic equation which express this function is $X=\overline{A \times B}$, which is read "X is equal to not A and B The bar over A x B is the symbol for inversion.
It is noted that $\overline{A \times B} \neq \overline{A} \times \overline{B}$.
For your own observation, fill the truth table below.

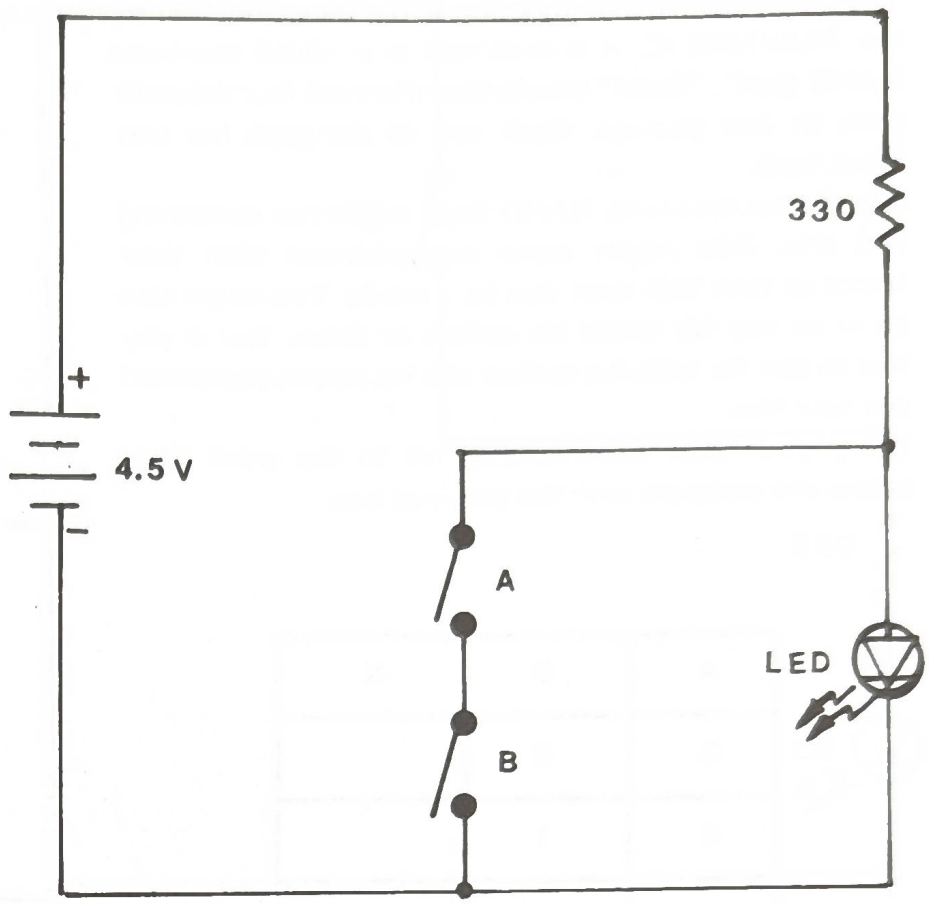

A	B	X
0	0	
0	1	
1	0	
1	1	

Wire Sequence

15–40–60
16–57
17–39
58–59

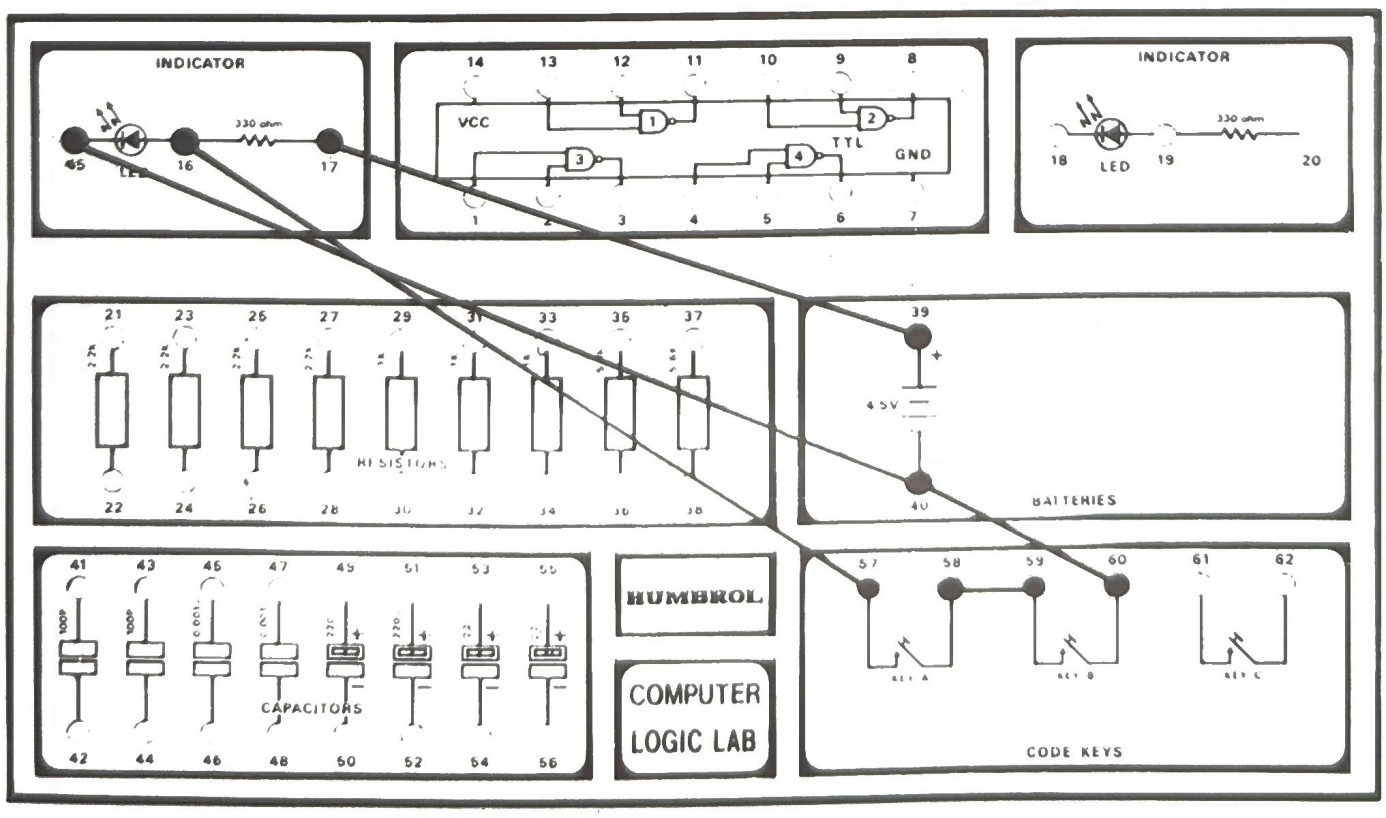

9. TTL NAND GATE

The two input NAND function is the basic function of the 7400/7403 IC. It is described as a "Quad two-input NAND gate". "Quad" means that there are four separate gates in one package. Each one of the gates has two input leads.

A situation involving NAND logic might run something like this. You might make an agreement with your friend to take him with you to a movie. You might also agree to pay for either his carfare or ticket. But if you had to pay for both his carfare and his ticket, you would not take him.

Using your own observations, fill in the truth table below and compare with the previous one.

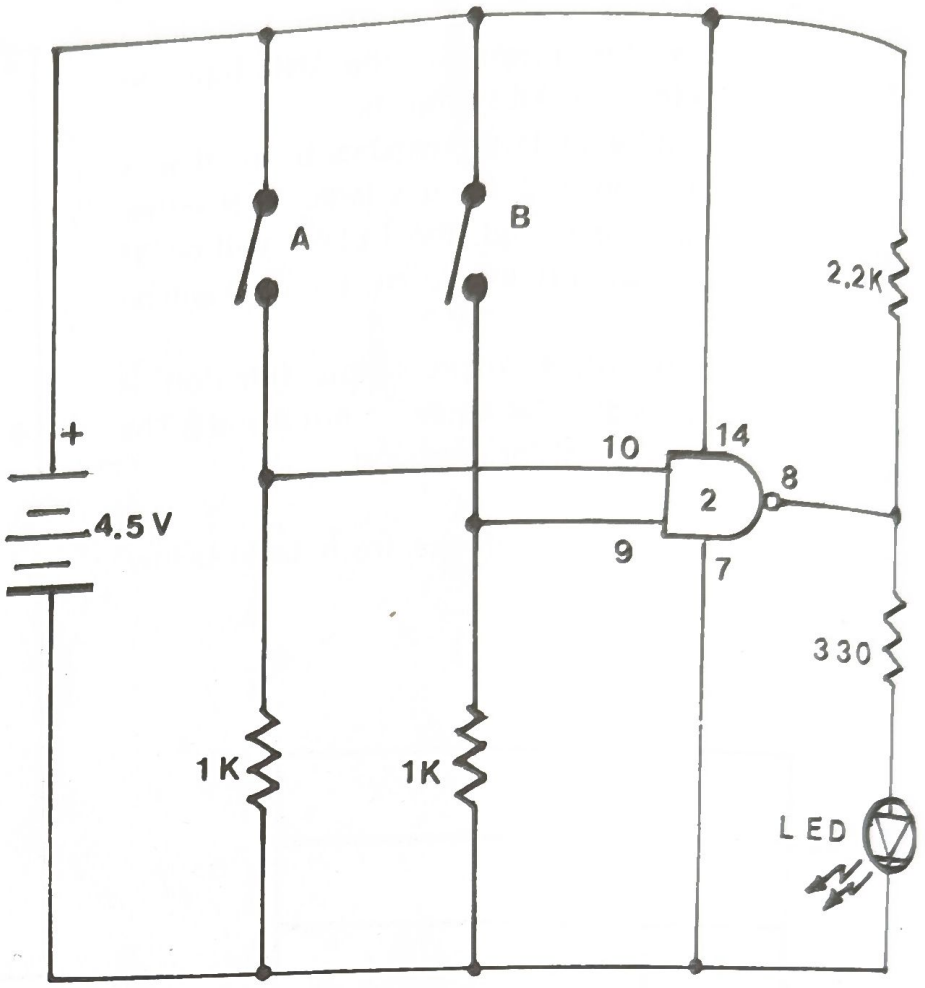

A	B	X
0	0	
0	1	
1	0	
1	1	

Wire Sequence

8–27–17
9–31–59
10–29–57
15–30–32–7–40
28–14–39–58–60

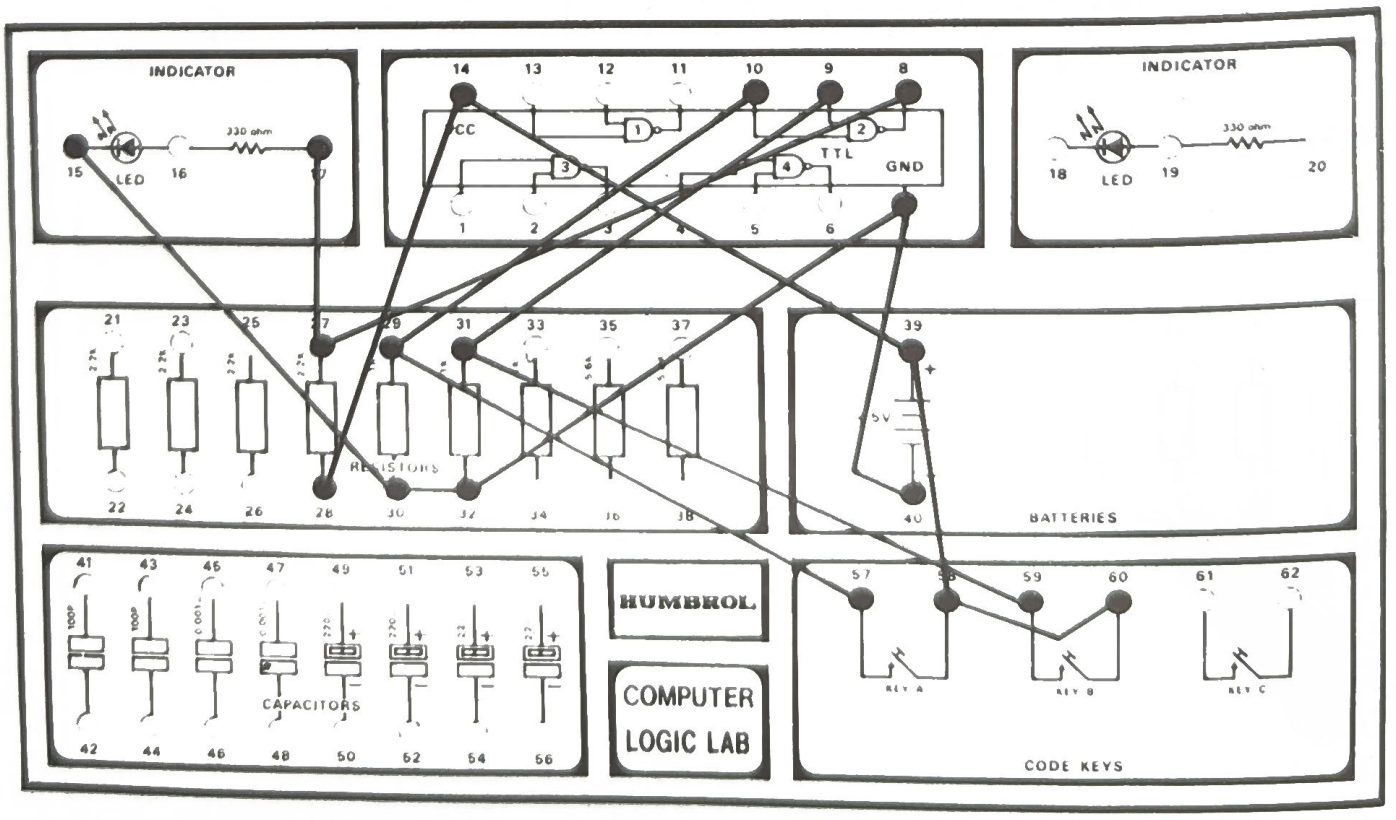

10. OR GATE

Another basic logic function is the OR operation. For a two input OR gate, the output will have a value of logic 1 when either one of the inputs or both of the inputs have a value of logic 1.
The logic equation which expresses this function is X=A+B, which read as "X is equal to A or B".
It is noted that the plus mark does not mean addition. But read as "or"
Follow the layout diagram and the wire sequence listing and connect the wires carefully, fill in the truth table below and compare it with the previous one.

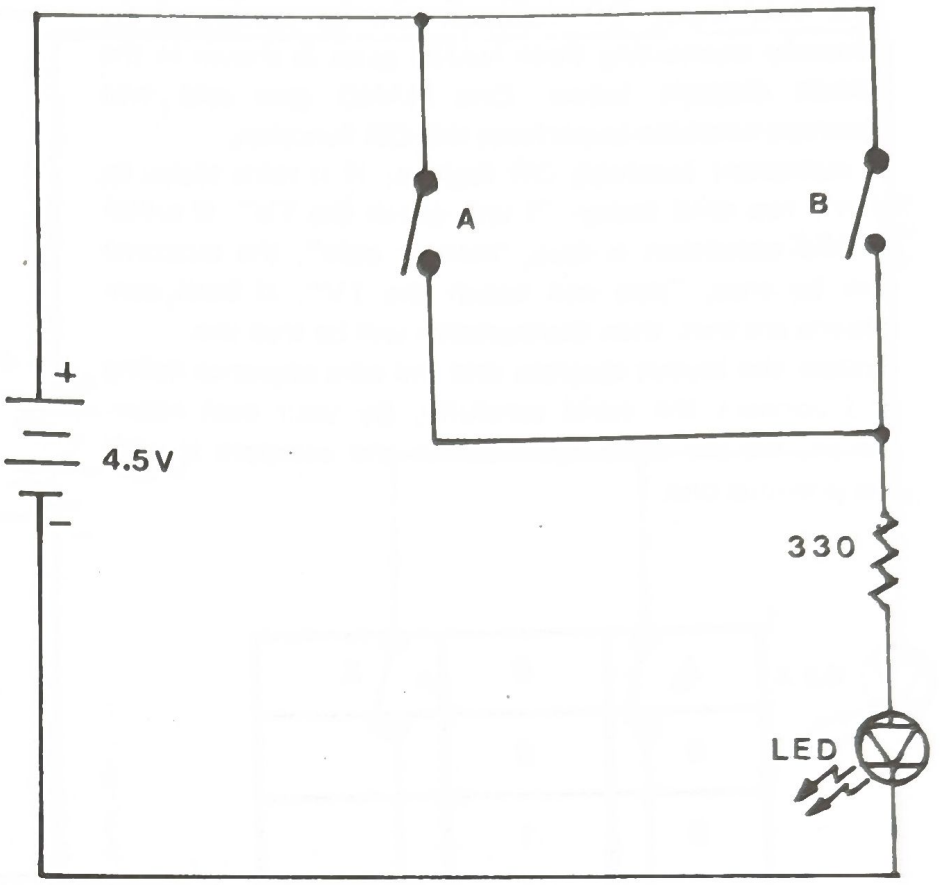

A	B	X
0	0	
0	1	
1	0	
1	1	

NOTE:

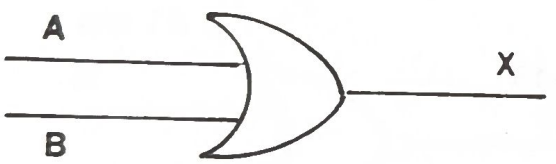

OR GATE

Wire Sequence

15 – 40
17 – 57 – 59
39 – 58 – 60

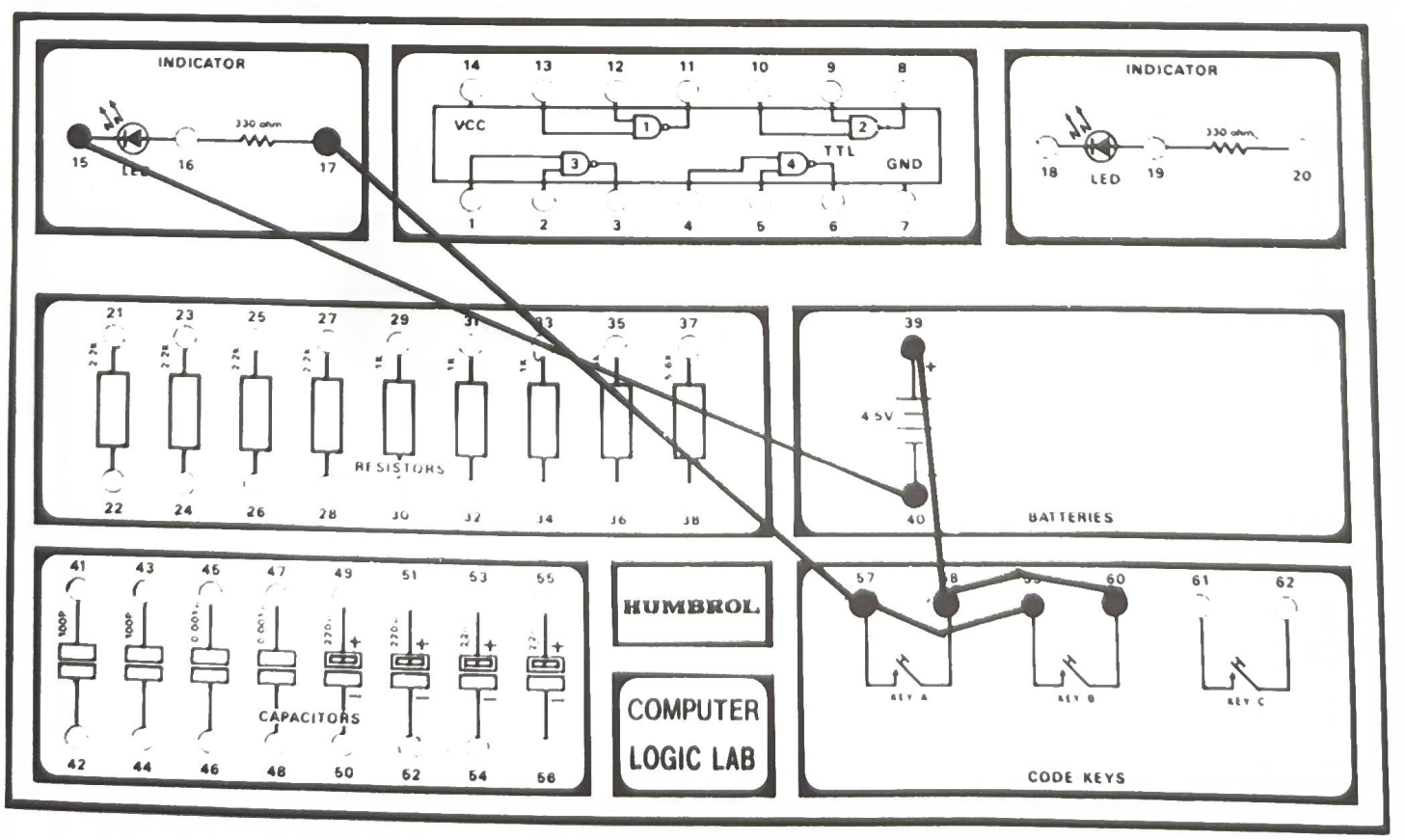

11. TTL OR GATE

The two input OR function can be performed by properly connecting three NAND gates as shown in the circuit diagram below. One NAND gate and two inverters combine to perform this OR function.

A statement involving OR logic is: If it rains today or if it's too cold today, "I will watch the TV". If either of the condition is true, "rain or cold", the outcome will be true, "you will watch the TV". If both conditions are true, then the outcome will be true too.

Follow the layout diagram and the wire sequence listing and connect the wires carefully. By your own observation, fill the truth table below and compare it with the previous one.

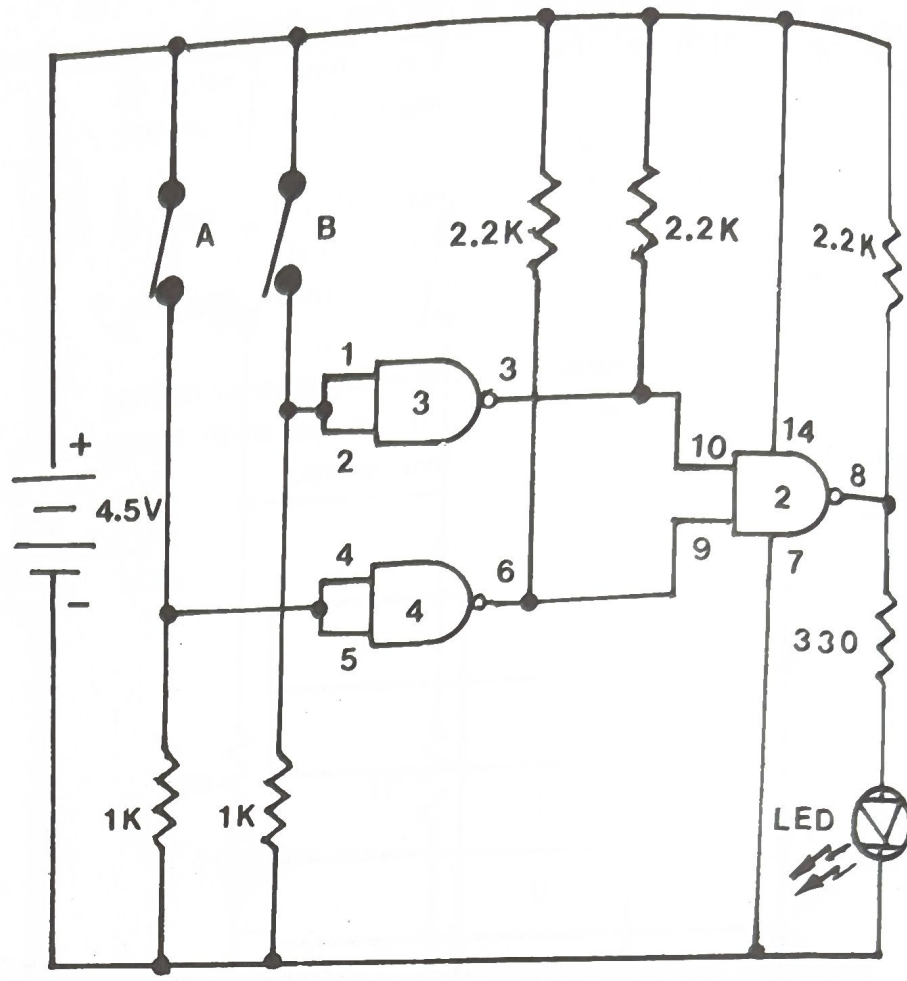

A	B	X
0	0	
0	1	
1	0	
1	1	

Wire Sequence

2–1–29–59
7–40–32–30–15
8–17–23
9–6–25
10–3–27
14–24–26–28–39–58–60
31–4–5–57

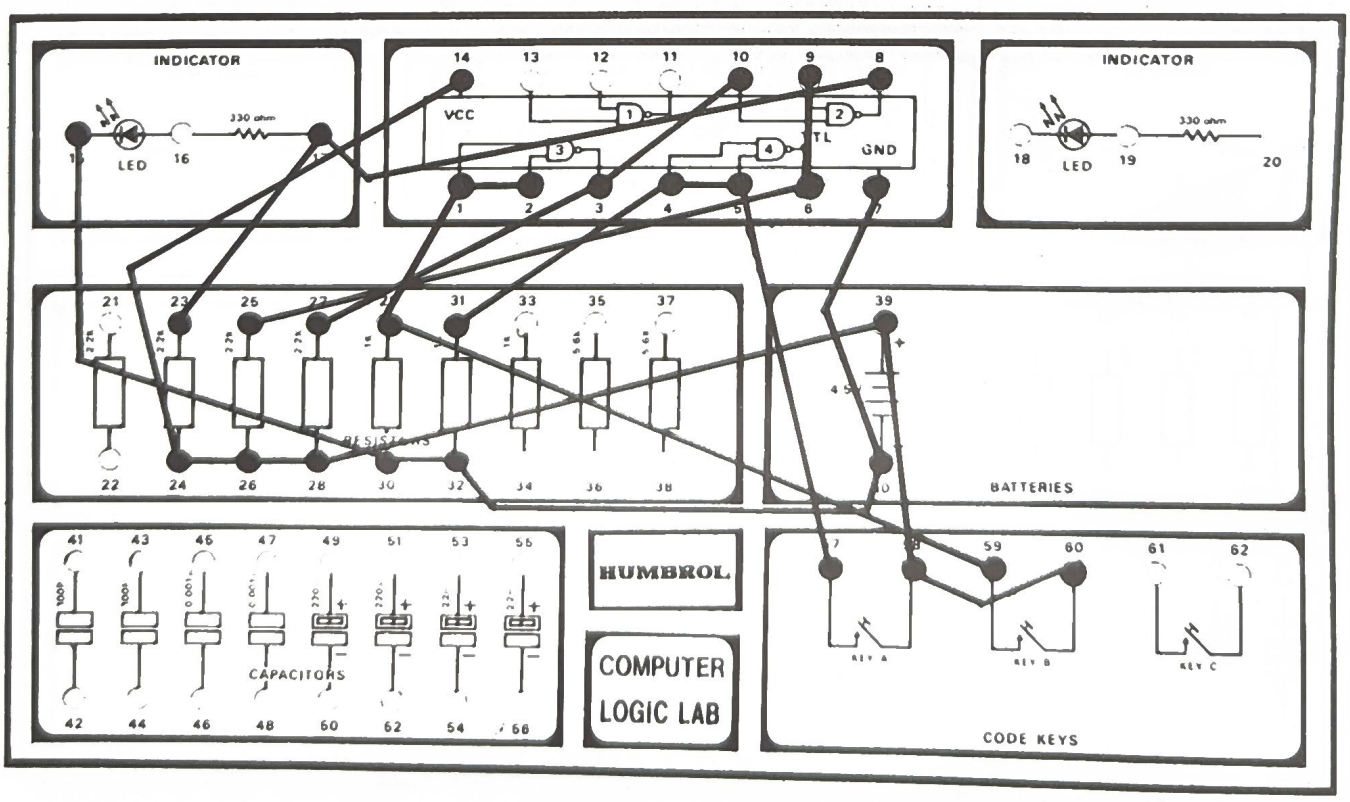

12. NOR GATE

This NOR operation is our last basic logic function. NOR means Not OR. The action of a NOR circuit is just the opposite to that of an OR circuit.

The NOR operation can be expressed by the logic equation as $X=\overline{A+B}$, which is read as "X is equal to not A or B". The bar over is simply the symbol for inversion. It is noted that $\overline{A+B} \neq \overline{A}+\overline{B}$.

The logic circuit symbol at note is the one for the NOR function.

Follow the circuit diagram and the wire sequence listing and connect the wires carefully. By your own observation, fill in the truth table below and compare it with the previous one.

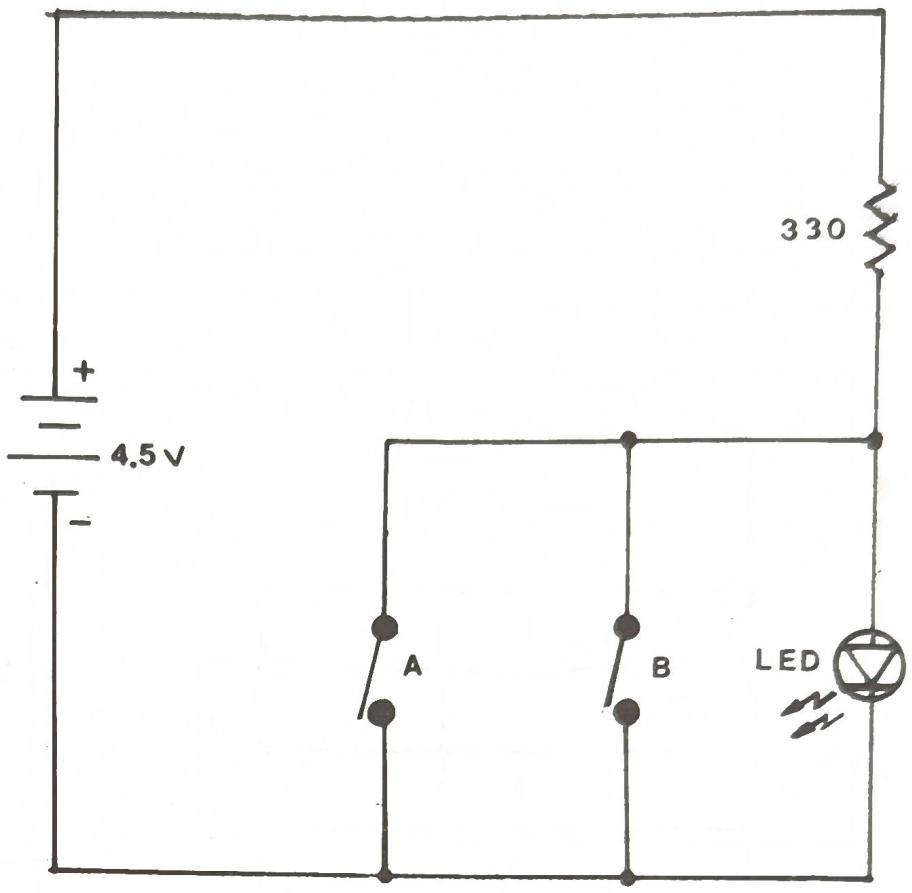

A	B	X
0	0	
0	1	
1	0	
1	1	

NOTE:

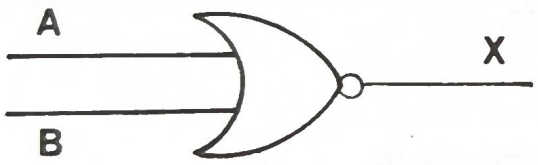

NOR GATE

Wire Sequence

15–40–57–59
16–58–60
17–39

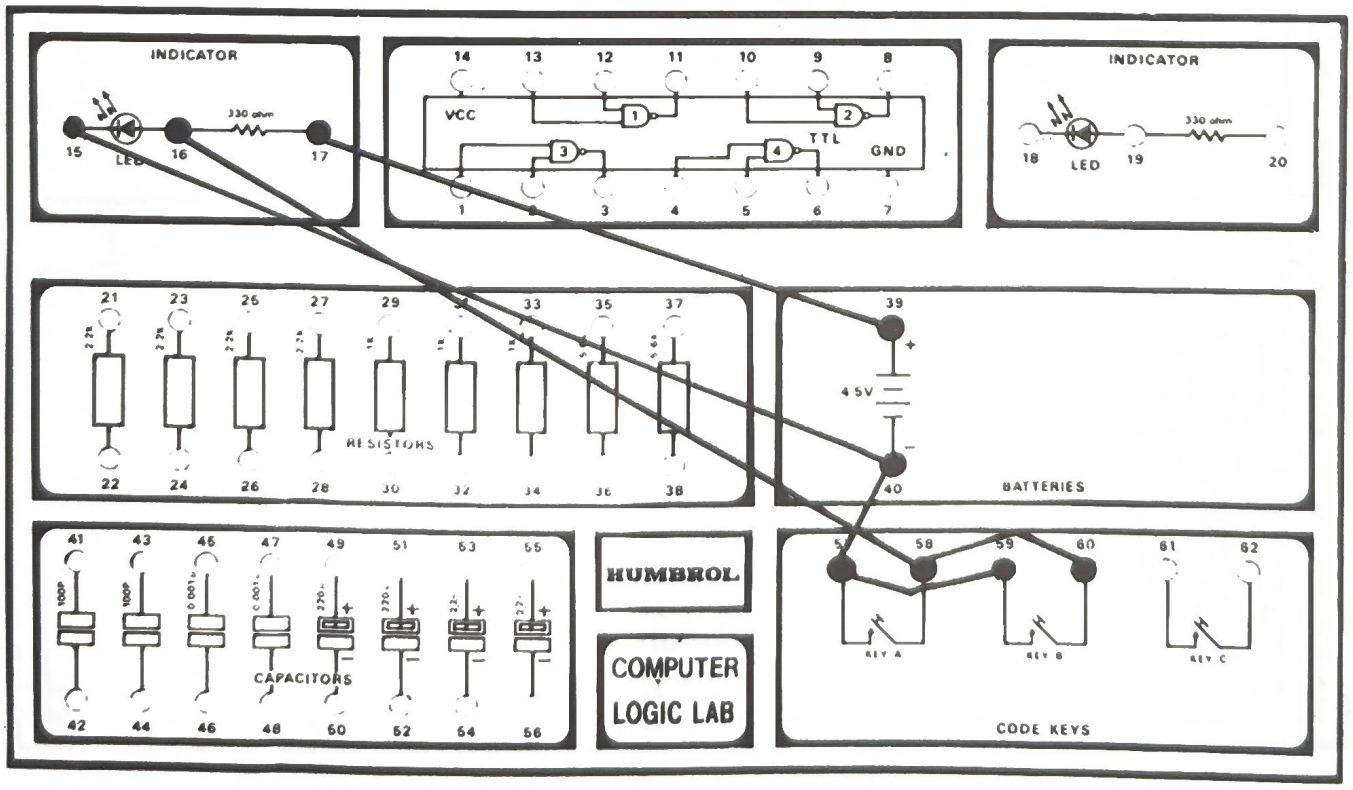

13. TTL NOT GATE

By connecting our four NAND gates properly, we can perform a two-input NOR function.
A situation involving NAND logic might run something like this. You might make an agreement with your friend to visit him today, if it is not raining or if it's not too cold. If neither of the conditions are true (0), it is not raining and it's not too cold, you will visit him (1). If either or both the conditions are true (1), you will not visit him (0).
Follow the circuit diagram and wire sequence listing and connect the wires carefully. From your own observation, fill in the truth table below.

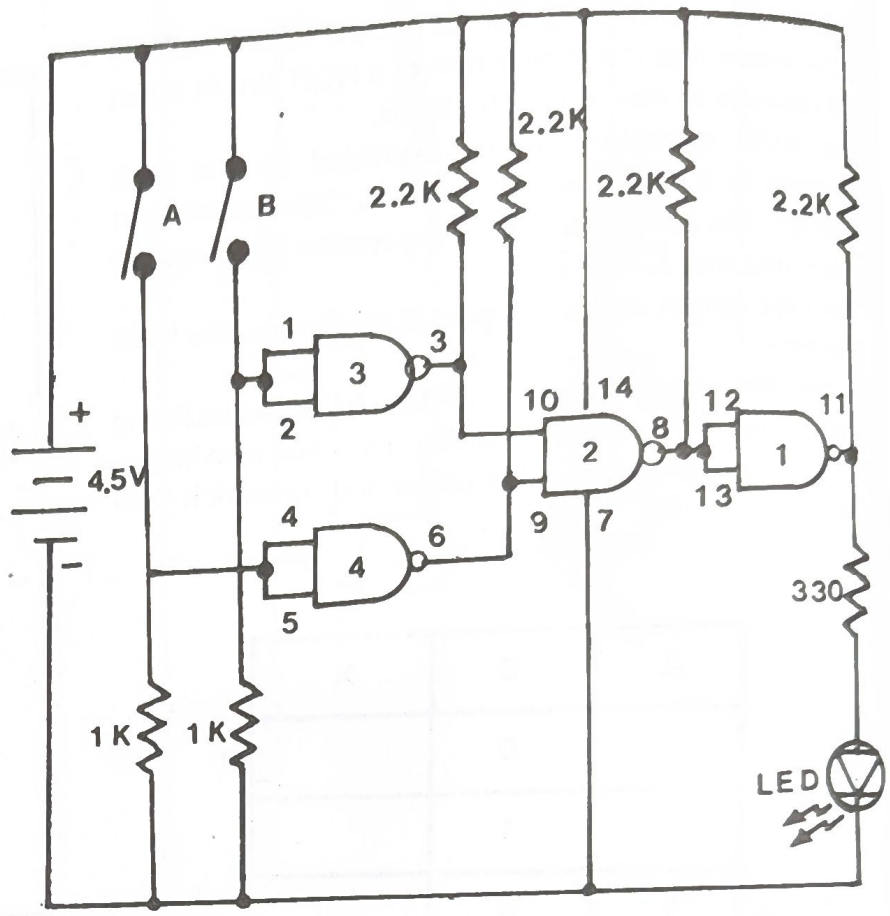

A	B	X
0	0	
0	1	
1	0	
1	1	

Wire Sequence

2–1–29–59
5–4–31–57
7–40–32–30–15
8–12–13–25
9–6–23
10–3–21
11–17–27
14–22–24–26–28–39
39–58–60

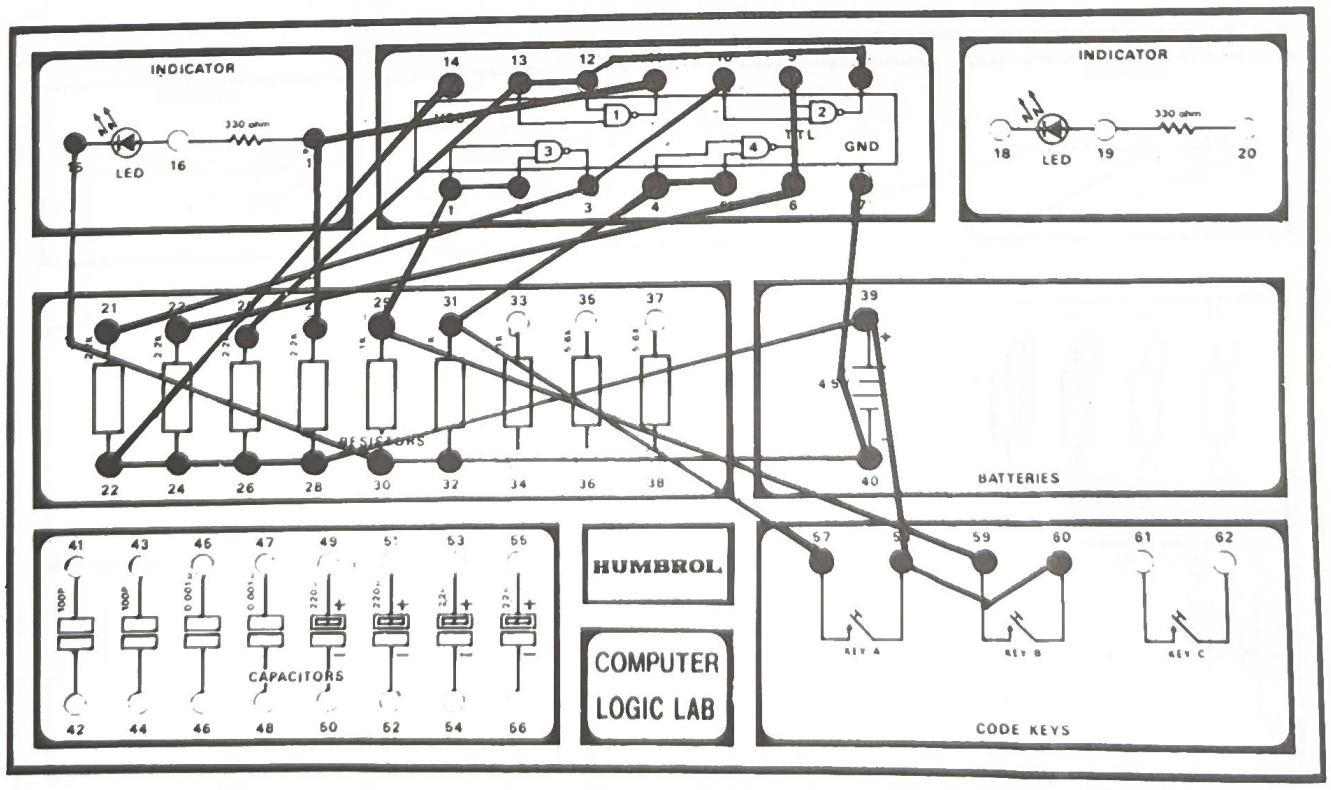

14. TTL EXCLUSIVE – OR

Sometimes, in certain situations, we may need a logic operation that is a little different than one of the basic ones. In this and the next few projects we will find that by combining some of the basic logic functions, we can obtain some interesting results.

One of these is the "Exclusive – OR". In this operation the output will be 1 if either one of the inputs is 1, but not both. For example, a situation involving Exclusive OR logic might run something like this. "I will go to the party if either Rose or Lilly is invited, but not if they both are, because I am dating both of them."

The logic equation which express this function is $X = A \oplus B$, which is read "X is equal to A and not B or not A and B".

From your own observation, fill in the truth table below.

A	B	X
0	0	
0	1	
1	0	
1	1	

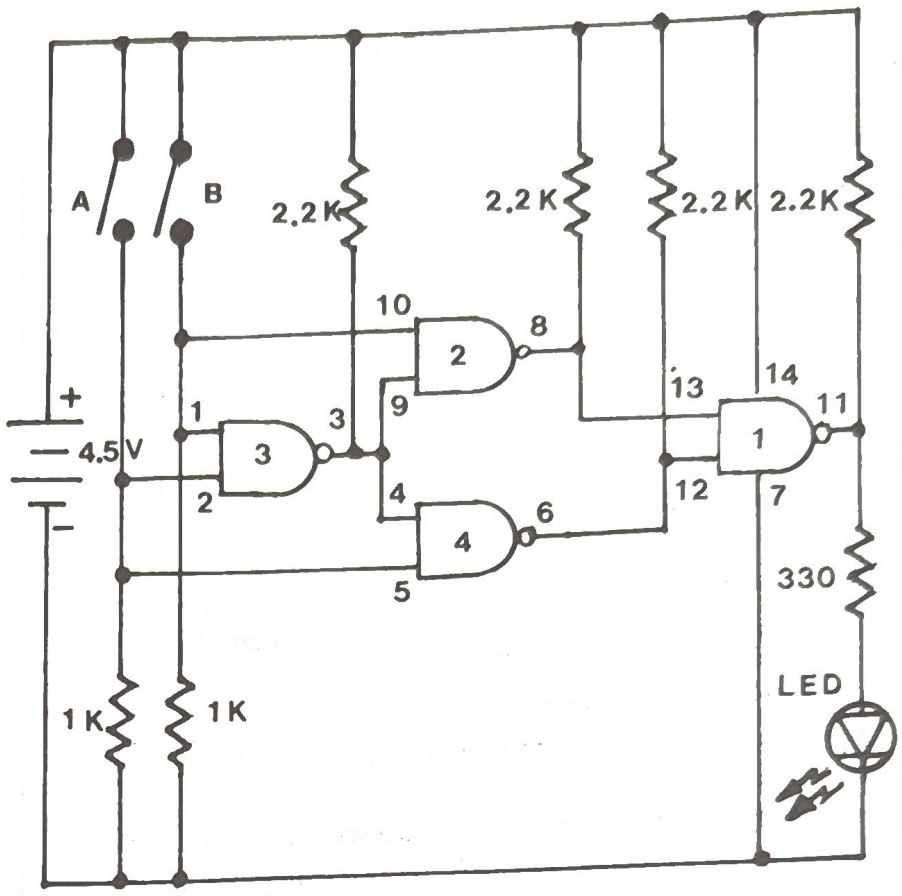

Wire Sequence

6–12–25
7–40–32–30–15
8–13–23
9–4–3–21
10–1–29–59
11–27–17
14–22–24–26–28–39
39–58–60
31–2–5–57

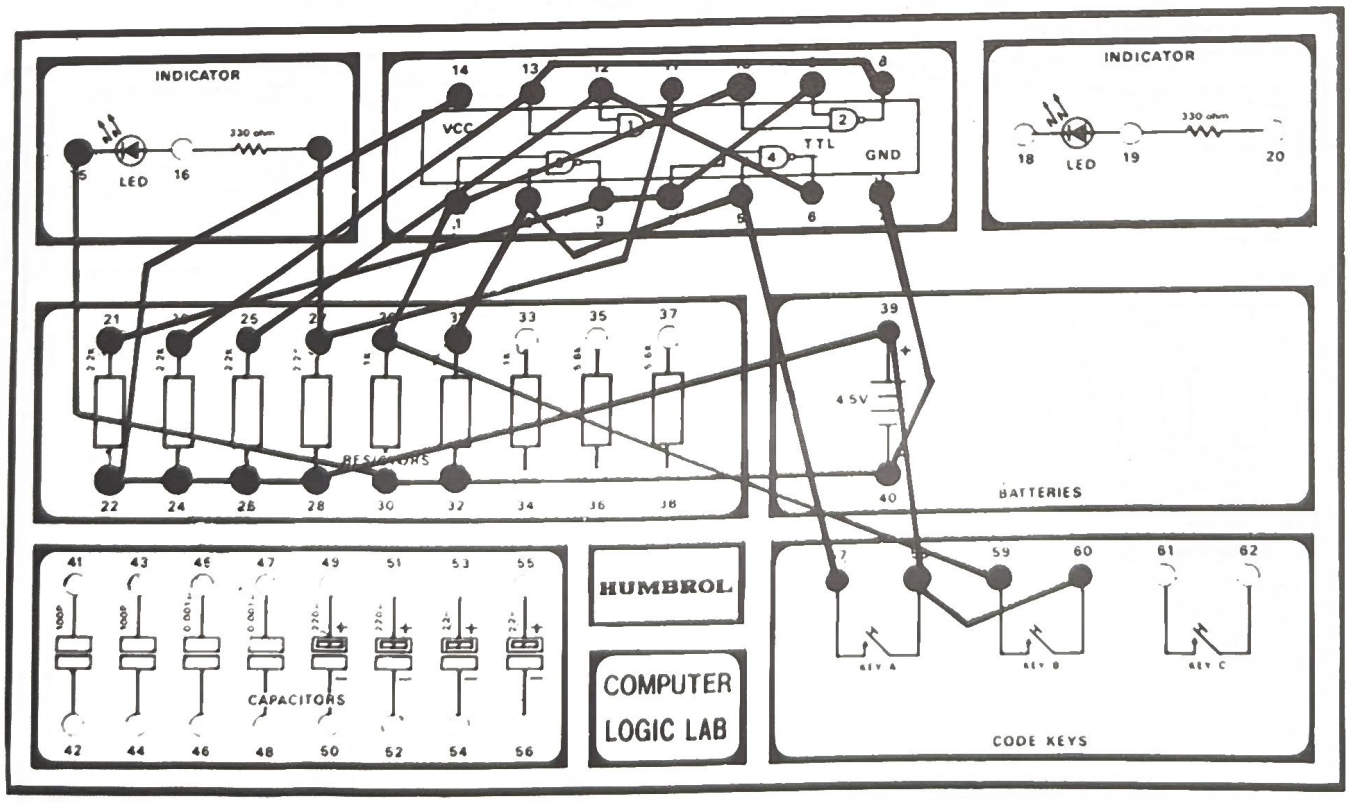

15. THE COMPARATOR

Another interesting operation, which is just the opposite of the exclusive-OR, is the comparator function. The comparator compares the two inputs, if they are the same, it will give an output. The logic equation for the comparator is $X=AB+\bar{A}\bar{B}$, which is read "X is equal to A and B or not A and not B".

Look at the circuit diagram carefully, the LED is connected differently from previous projects, since, if not, we would need five NAND gates instead of four to achieve a real comparator circuit. You have only four NAND gates in your kit.

For example, when A and B are both free, thus both inputs of gate 4, pin 4 of gate 3 and pin 9 of gate 2 are all connected to ground through the 1K resistors. The output of gate 2 and gate 3 go high, which make output of gate 1 goes low, the LED will on. This matches with the equetion $X = AB + \bar{A}\bar{B} = 0.0 + 1.1 = 1$. But, if the LED is connected as previous one, it would be off. You have to gate another gate which works as a NOT gate to turn the LED on.

Follow the layout diagram and wire sequence listing and connect the wires carefully. Fill in the truth table below according to your own observation.

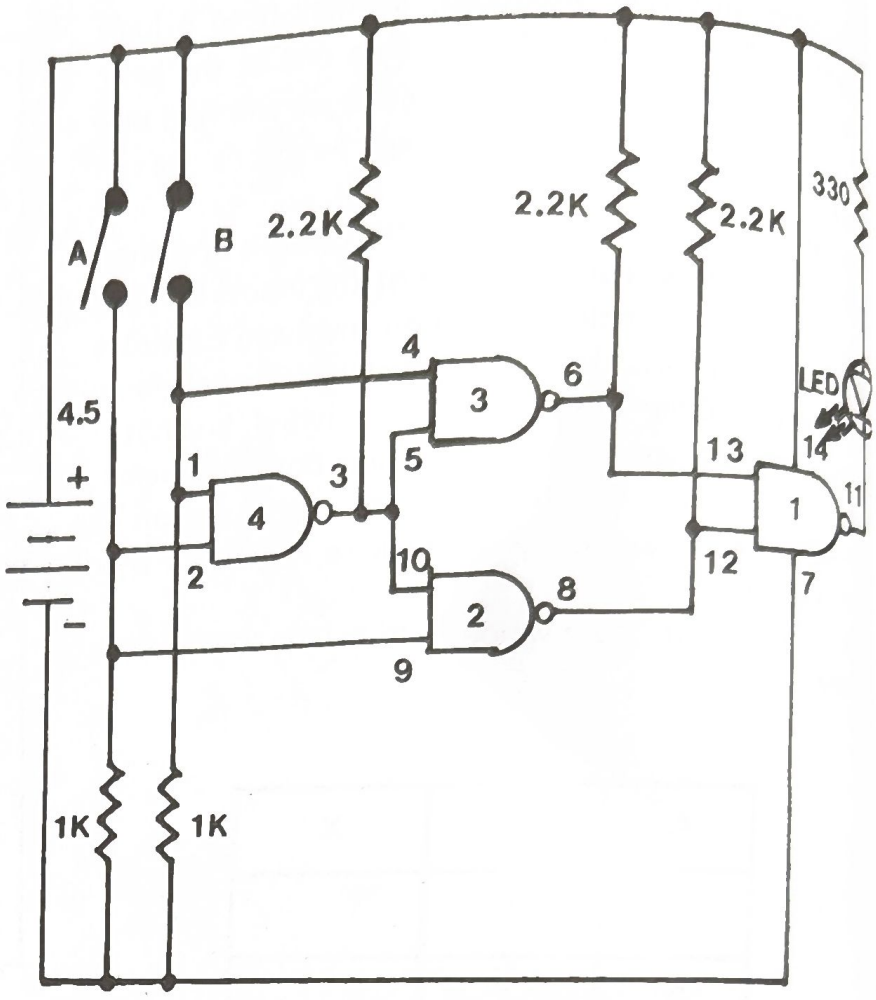

A	B	X
0	0	
0	1	
1	0	
1	1	

Wire Sequence

5–10–3–21
6–13–23
7–30–32–40
8–12–25
9–2–31–57
11–15
14–17–22–24–26–39
39–58–60
29–1–4–59

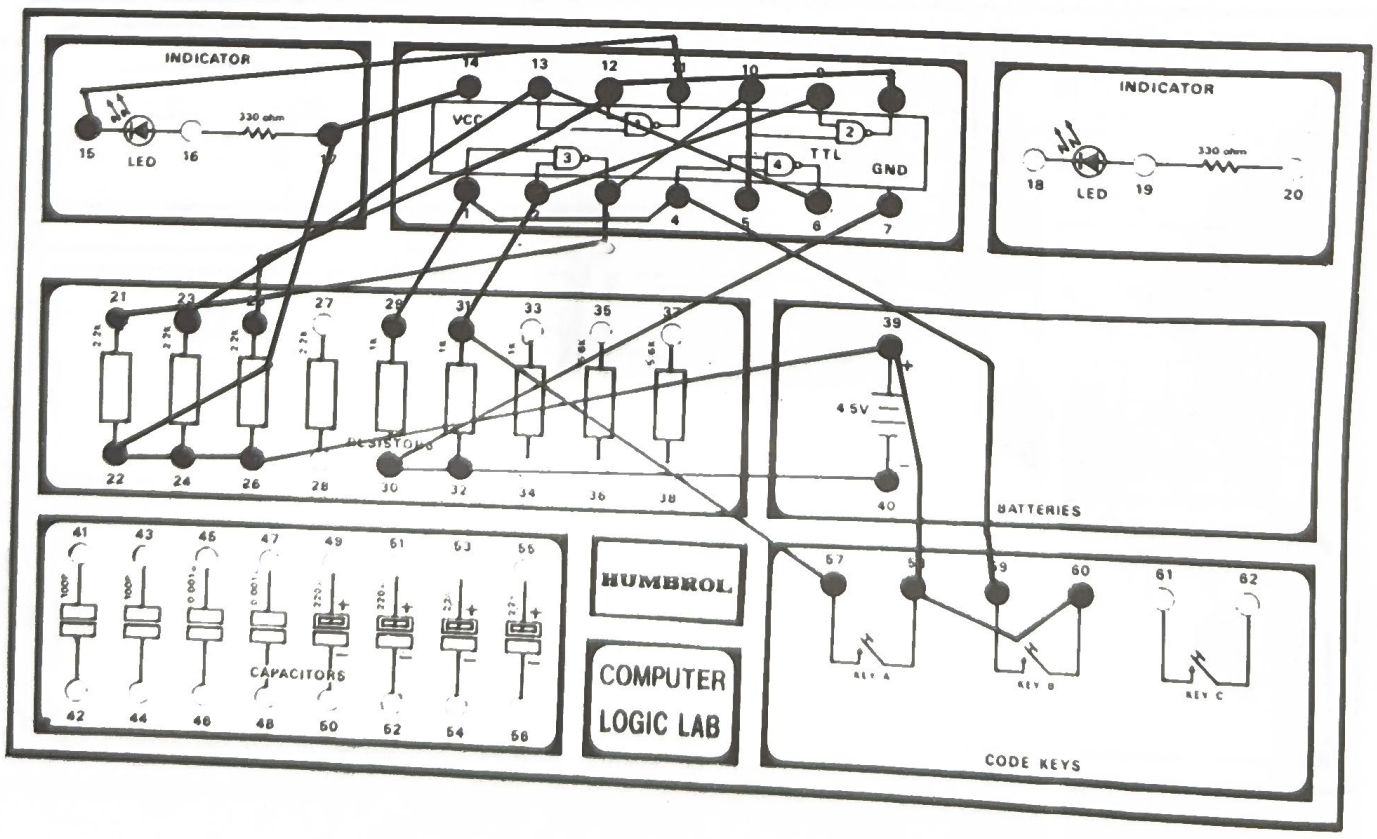

16. AND GATE AS ENABLE FUNCTION

Sometimes the AND gate can be used to control the data flow. When the gate is open, or enabled, the data can flow through the gate and if the gate is closed, or disabled, the data is blocked at the input.

Look at the circuit diagram carefully, it is the same as the project 7, but we will look at it from a different point of view. With key B (enabled) open, the input from key A (data) will not appear in the output. With the key B close, the input from key A will appear in the output.

Connect the wires carefully and by your own observation, fill in the truth table below.

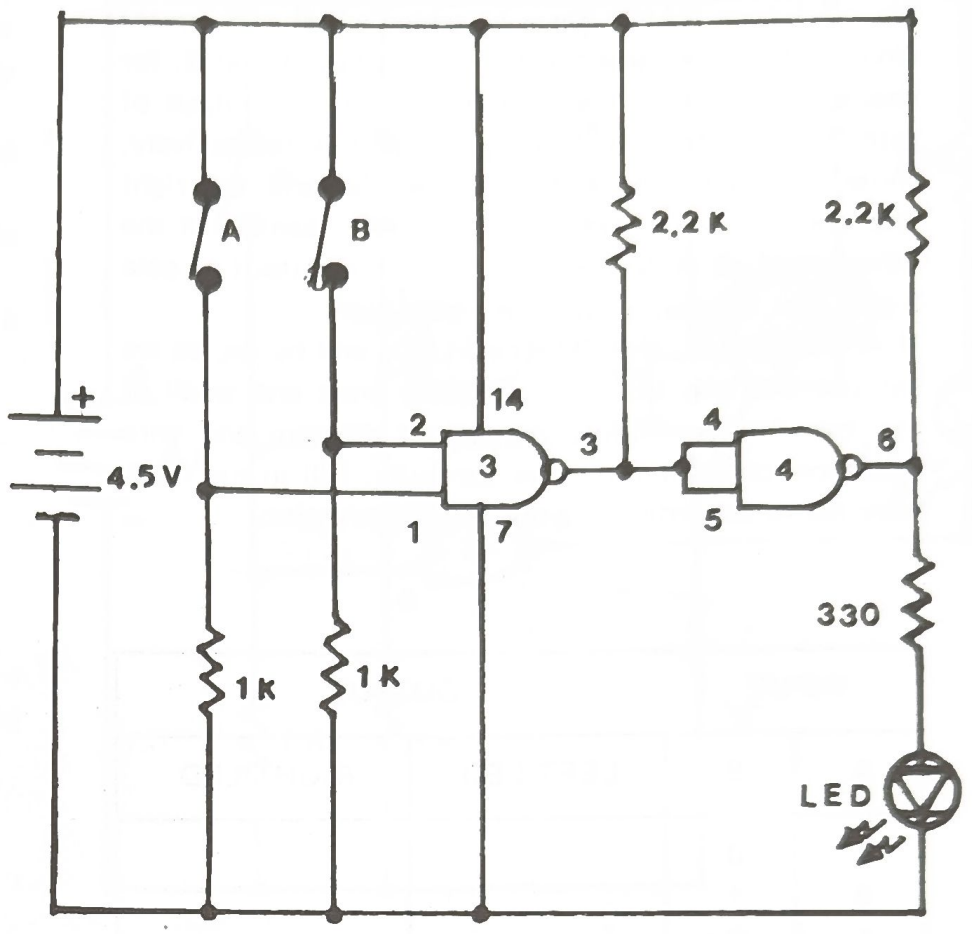

Enable	Data	Output
0	0	
0	1	
1	0	
1	1	

Wire Sequence

1–29–57
2–31–59
5–4–3–27
6–17–25
7–40–32–30–15
14–26–28–39–58–60

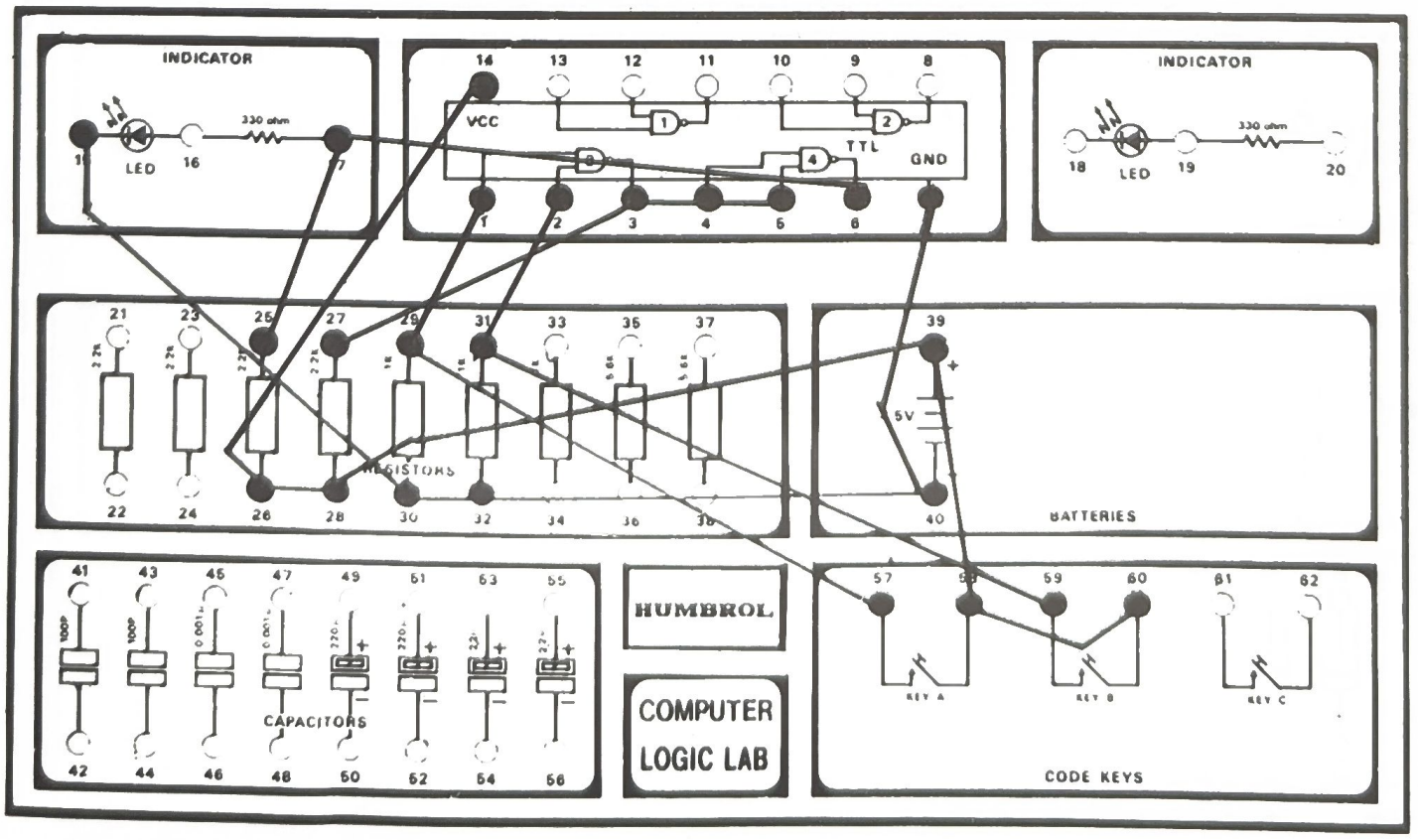

17. NAND GATE AS A COMPARATOR

We need four NAND gates to achive a real comparator circuit, that compares the two inputs key A and B, for example when A is free and B is close, the output of gate 3 and gate 4 will go high and low respectively, those will make the left LED goes on and the right one goes off – it means A is smaller than B. In the other word, if A is greater than B, the output of gate 3 goes low, the output of gate 4 goes high.
If A equal to B, then the two LEDs will be on, so we can use the two LEDs to represent great and small of the two inputs. Follow the layout diagram and wire sequence, connect the wires carefully. Fill in the truth table below according to your own observation.

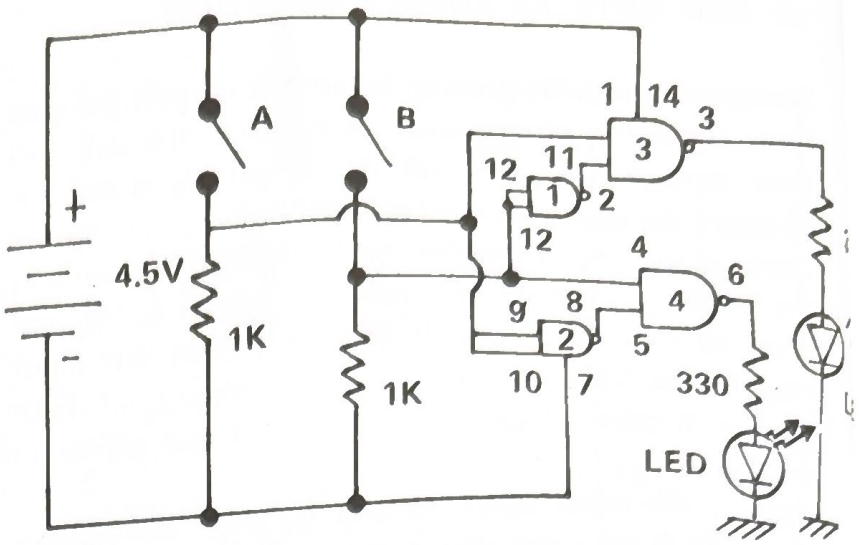

INPUT		OUTPUT	
A	B	LEFT LED	RIGHT LED
0	0		
0	1		
1	0		
1	1		

Wire Sequence:

9–10–1–31–57
15–32–34–40–7–18
14–39–58–60
12–13–4–33–59
2–11
3–17
5–8
6–20

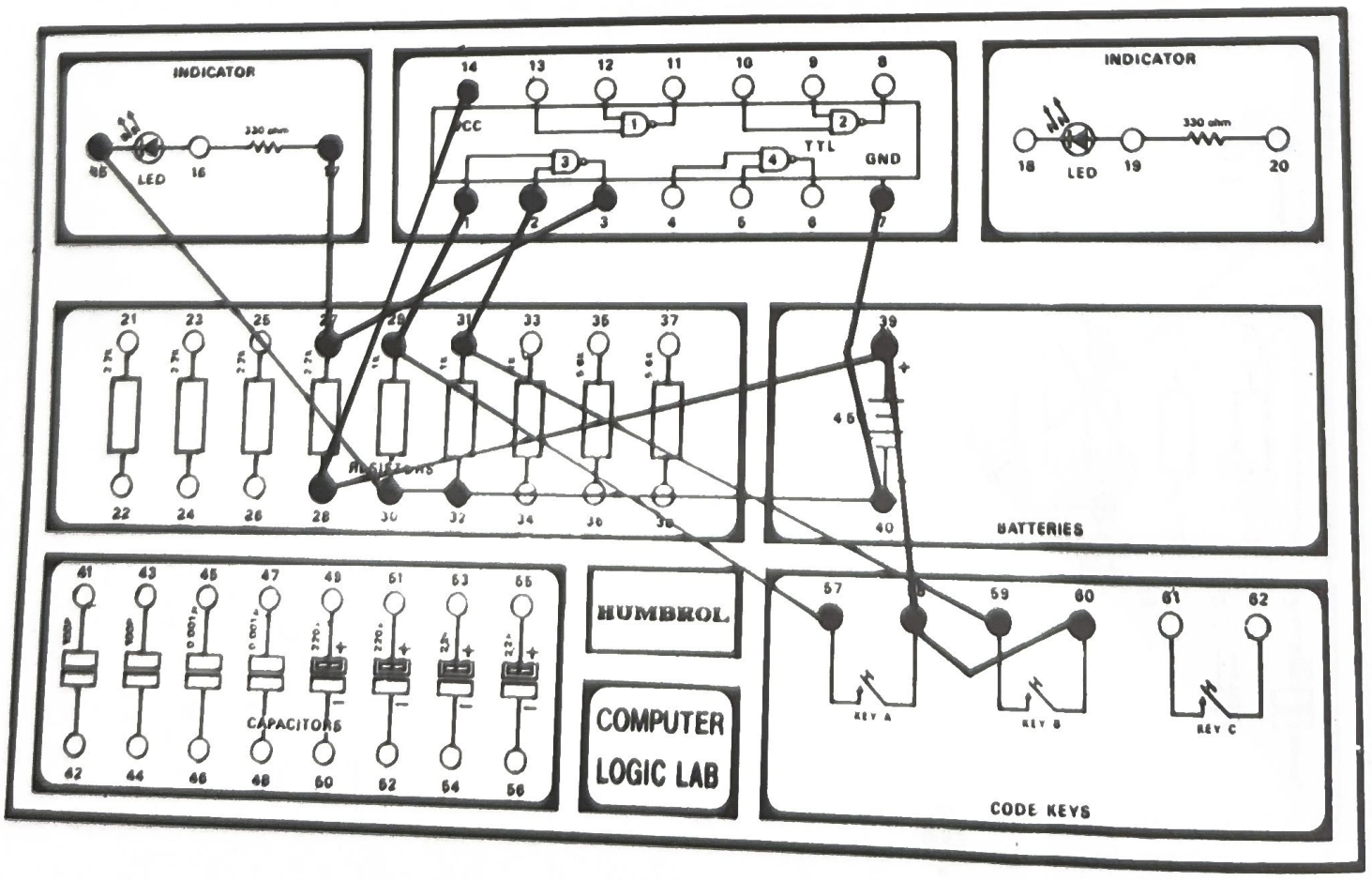

18. LINE SELECTOR

Sometimes, in a computer circuit, it is necessary to switch the data to one of several different lines. We are now going to learn the basic principle involved by studying the two line selector.

Look at the circuit diagram, the data source is controlled by key B, and key A is for the line selector.

The left and the right LED will indicate the conditions on Line 1 and Line 2, respectively.

It is noted that this circuit is the logic equivalent of a SPDT switch as below.

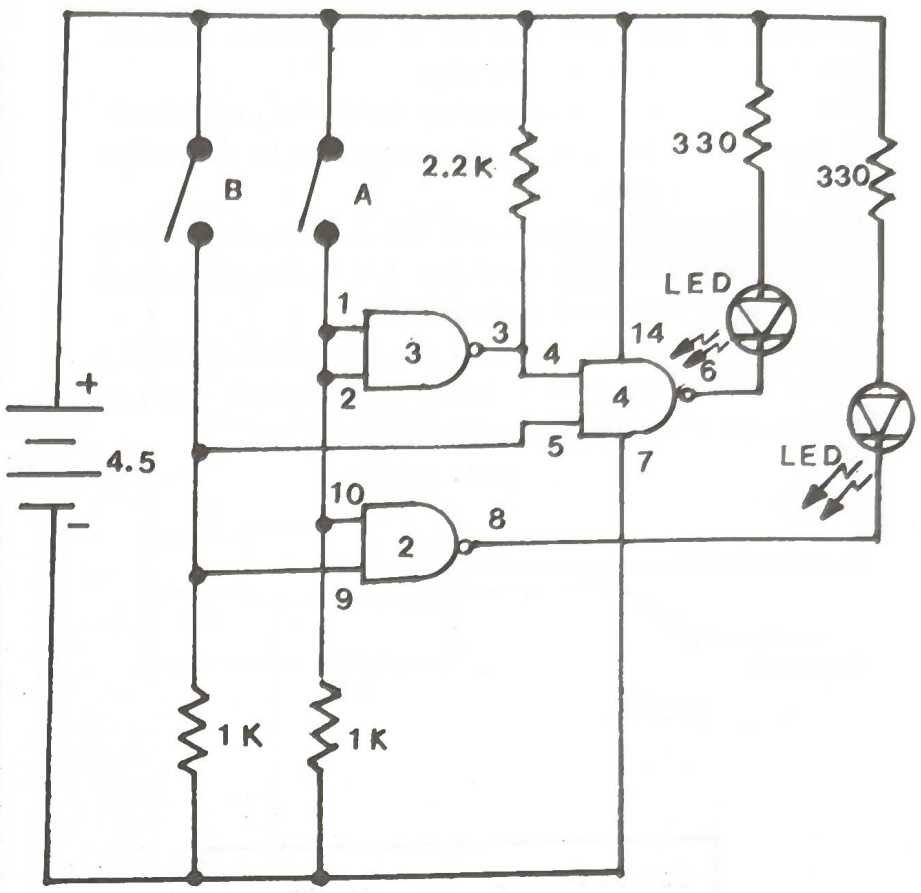

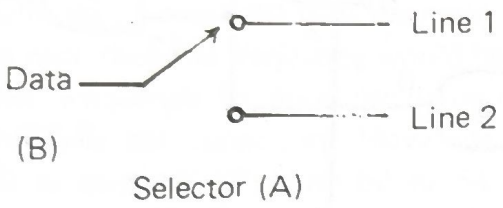

Repeat the operation above until you understand it thoroughly. From your own observation, fill in the truth table below.

Line Selector	Output Line No.
0	
1	

Wire Sequence

4–3–27
6–15
7–40–32–30
8–18
9–5–31–59
10–2–1–29–57
14–17–28–39–58–60–20

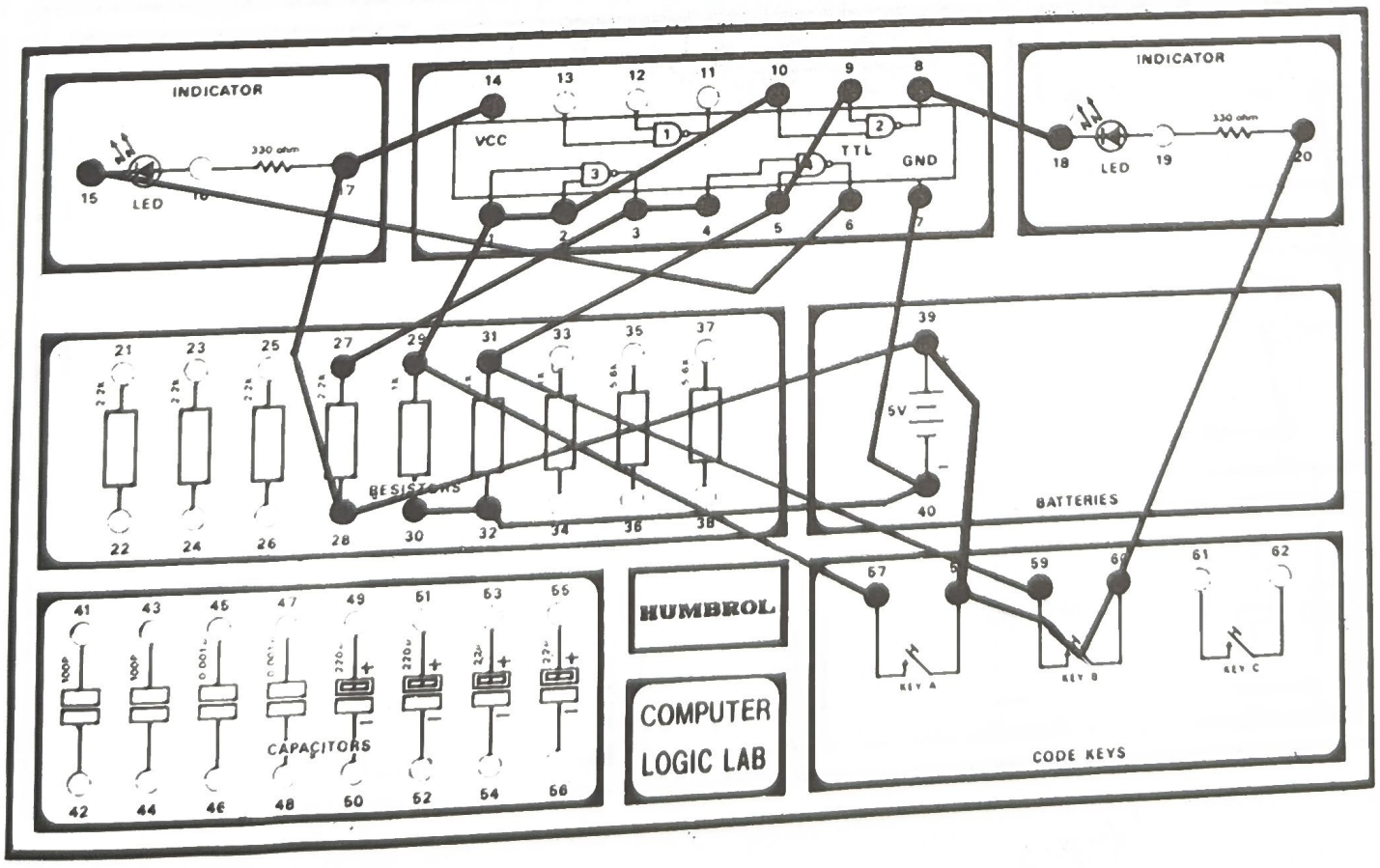

19. THE SOURCE SELECTOR

Another computer function which uses the same principle as the Line Selector is the Source Selector, which we are going to study now.
The Source Selector has another name, the multiplexer. It allows only one specific data source to be connected to the line at a time.
Follow the layout diagram and the wire sequence listing and connect the wires carefully. Fill in the truth table according to your careful observation.
It is noted that the circuit is the logic equivalent of a SPDT switch as shown below. The switch position determines which data source is selected.

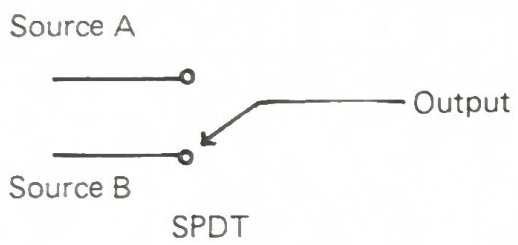

Source selector	Source
0	
1	

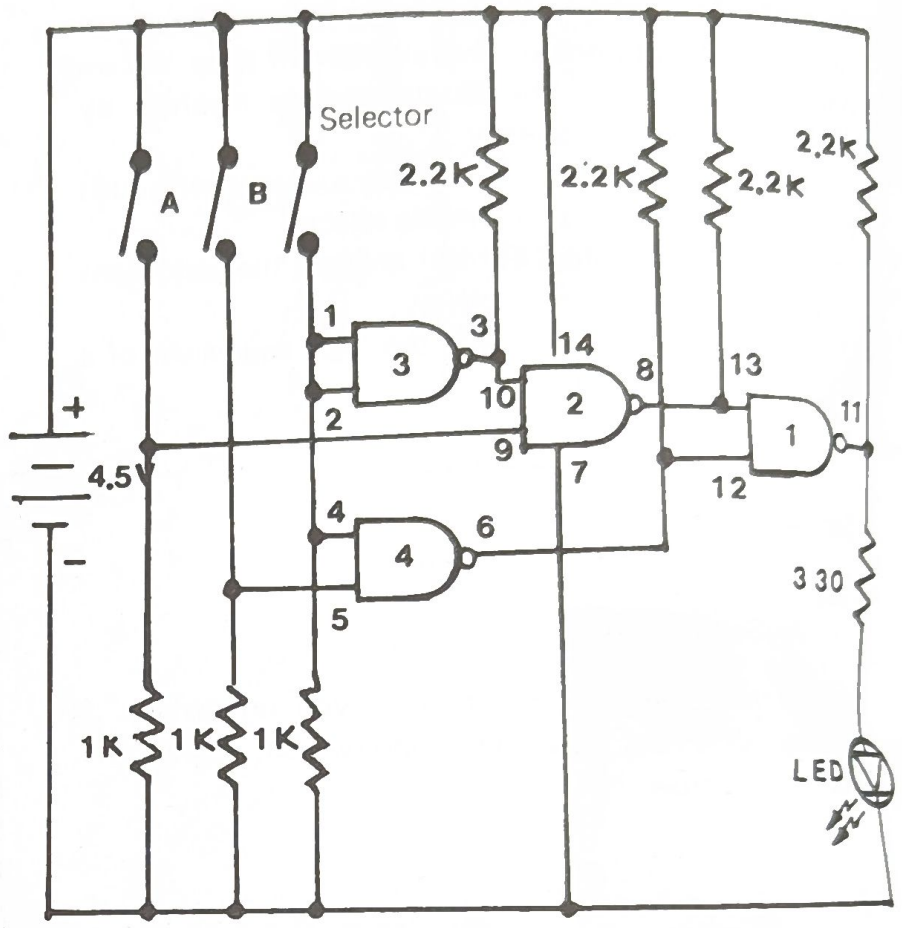

Wire Sequence 4–2–1–29–61
5–31–59
6–12–21
7–40–34–32–30–15
8–13–25
9–33–57
10–3–23
11–17–27
14–22–24–26–28–39–58
58–60–62

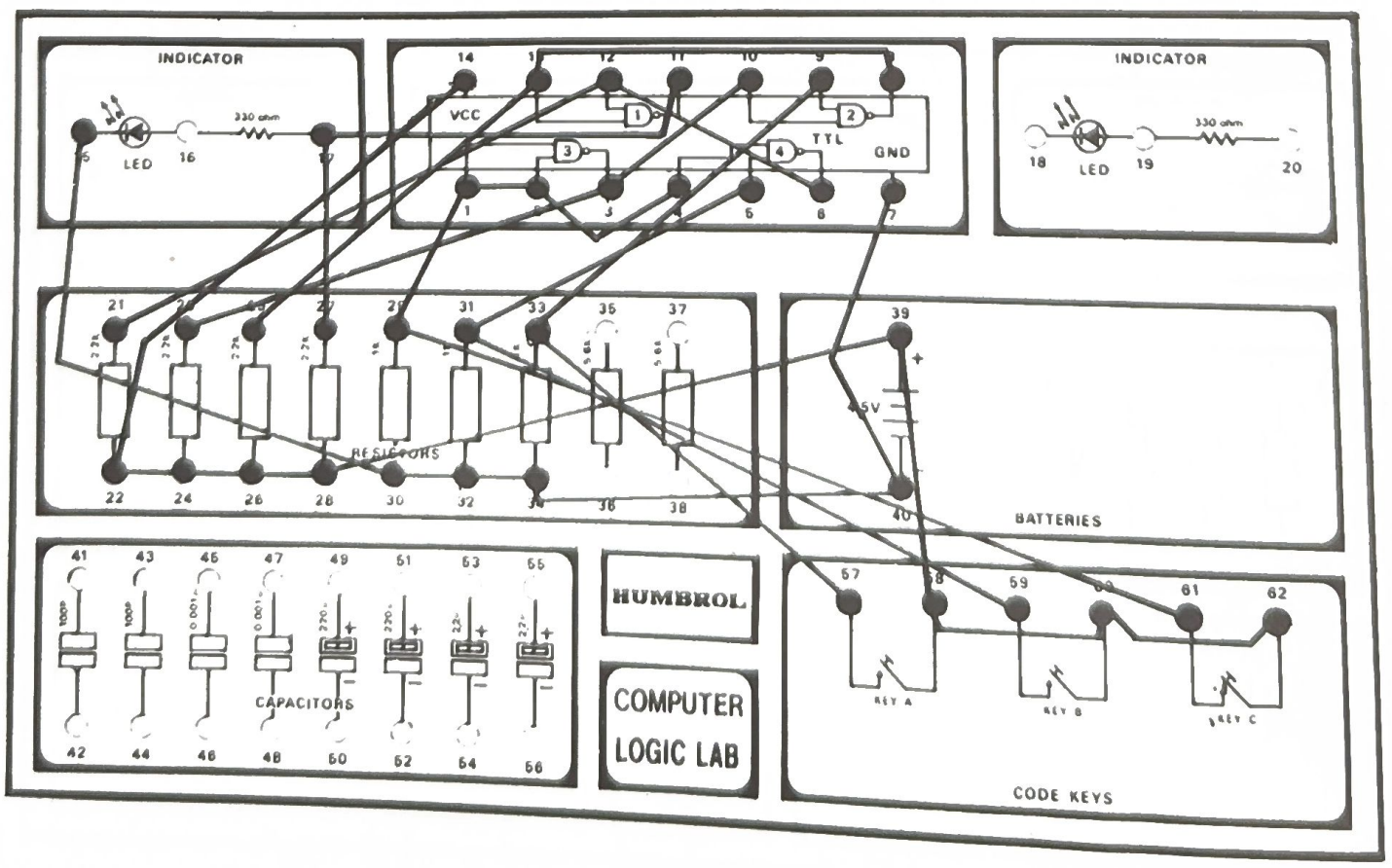

20. FREE-RUNNING MULTIVIBRATOR

Sometimes, in an electronic circuit, it is necessary to generate an electrical signal. The circuit used for this purpose is called an oscillator. In this project you will wire an oscillator-type called a free-running multivibrator. Follow the layout diagram and the wire sequence listing and connect the wires carefully. Soon after the last connection, you will find one of the LEDs should come on. After remaining for a while, it will turn off, and the other LED will come on.

Now, try to determine the frequency of the oscillator by estimating the time it takes between successive lightings of one LED. For example, if the period is half second, then the frequency would be F = 1/0.5 = 2 Hz.

The frequency of your oscillator can be changed by changing the capacitors. Move the lead from terminal 49 to terminal 53, from 50 to 54, from 51 to 55 and from 52 to 56. What happens now?

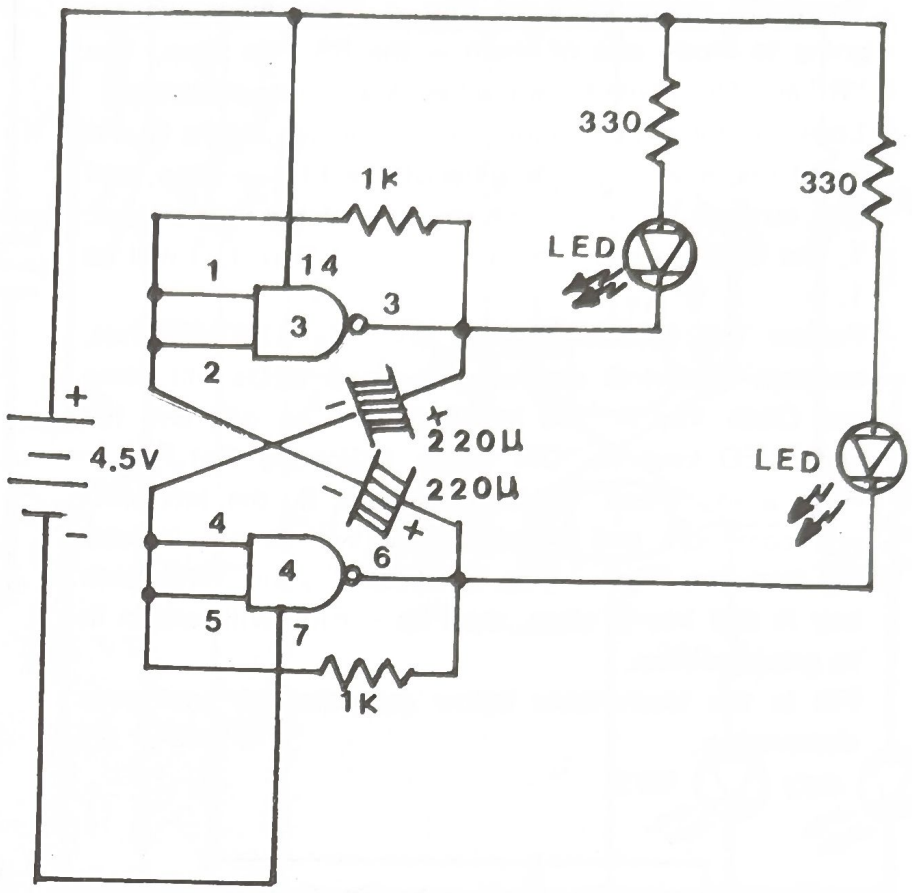

Wire Sequence

1–2–29–50
3–15–30–51
4–5–31–52
7–40
18–6–32–49
20–39–14–17

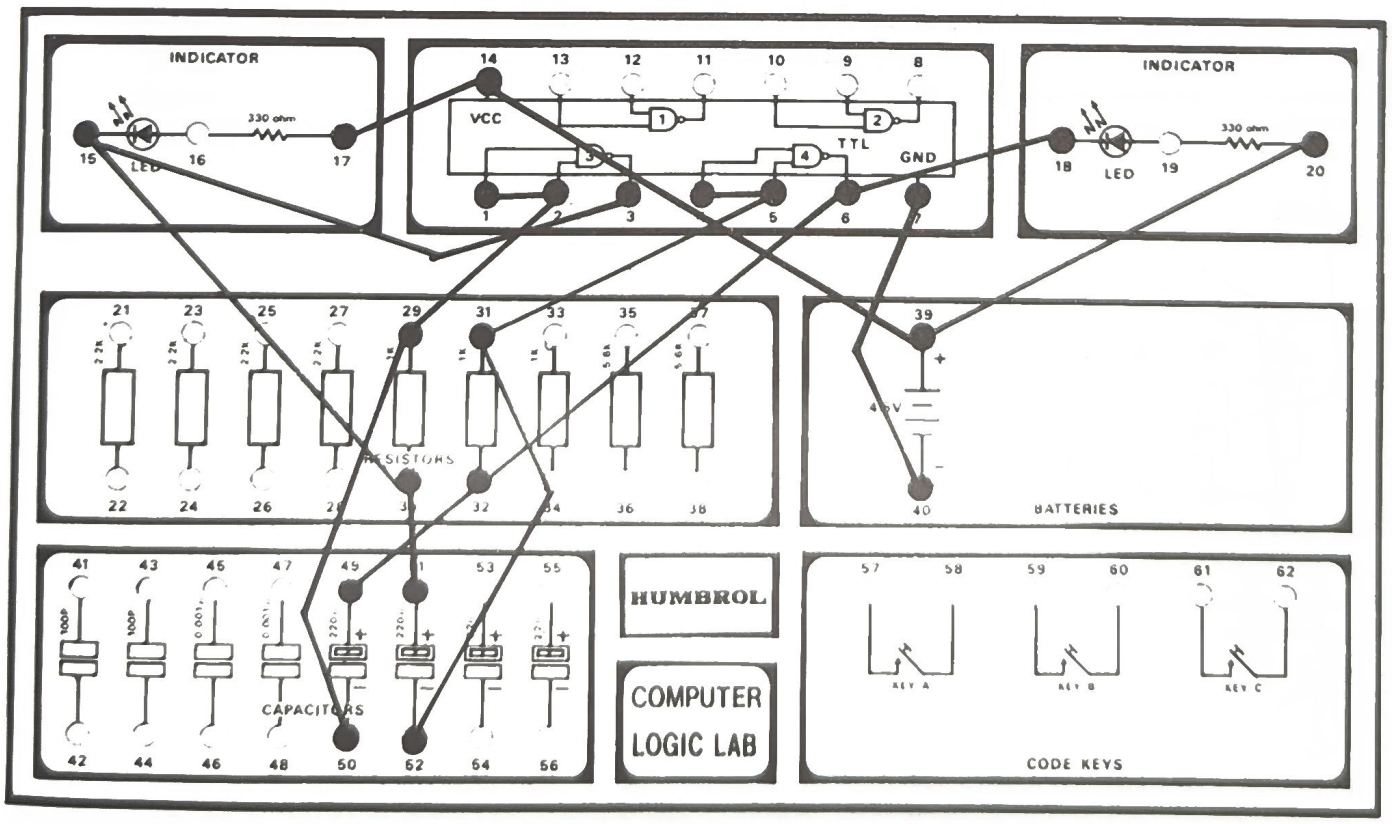

21. RS FLIP – FLOP

There are many kinds of Flip – Flop. Now, we are going to study one of them – the RS Flip Flop. The "R" and "S" come from the key A and B respectively. Look at the cirucit below, there are two inputs R and S, which determine the state of the Flip – Flop, and two outputs Q and $\overline{Q}$, which imply if the Q is at logic 1, the $\overline{Q}$ output will be at logic 0, if Q is 0, $\overline{Q}$ will be 1.

Follow the layout diagram and the wire sequence, connect the wires carefully, the two LEDs will come on. Close key A, the left LED will go off, and the right LED keep in "ON" state, indicating that Flip – Flop is in "Reset" state. Close key B, the left LED will come on, and the right LED will go off, indicating that the Flip – Flop is in "Set" state. With both key A and key B close, the Flip – Flop will remain in its previous state.

Fill in the truth table below according to your own observation.

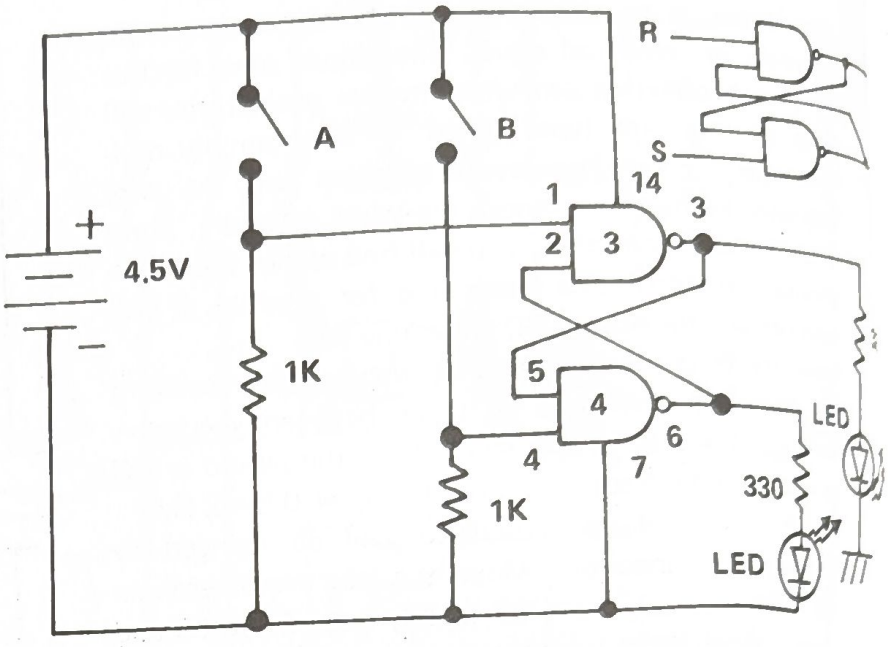

INPUT	OUTPUT
RS (A, B)	Q $\overline{Q}$ (LEFT, RIGHT LED)
0 0	
1 0	
0 1	
1 1	

Wire Sequence

15–32–34–40–7–18
17–3–5
1–31–57
2–6–20
4–33–59
14–39–58–60

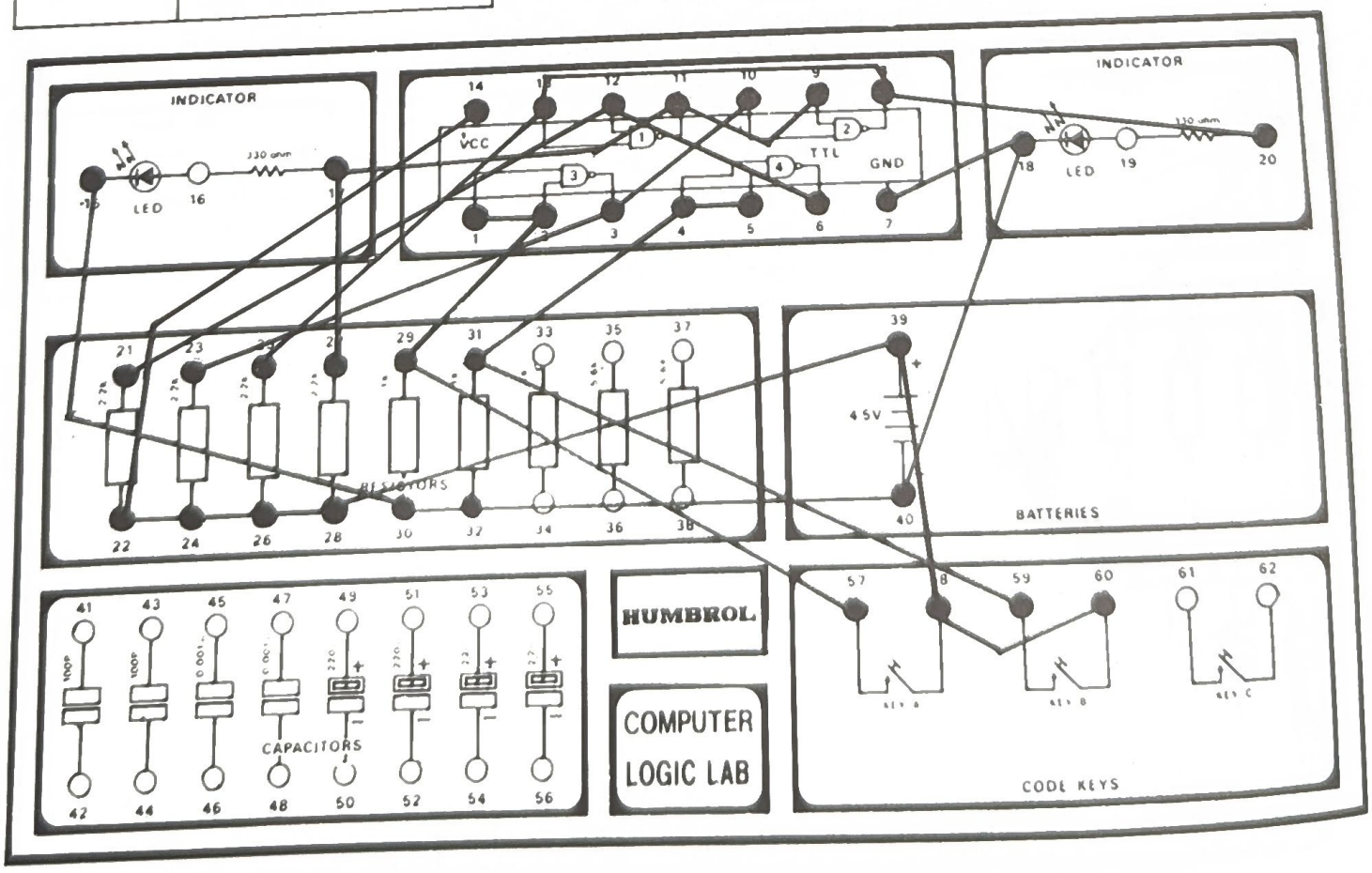

22. GATED FLIP-FLOP

The Flip-Flop shown in the circuit diagram below is very similar to the previous project except that the two input inverters have been reconnected as a NAND gate. This kind of connection allows a gating on enabling function.

Look at the circuit diagram. When you have finished the last wire connection, one of the LEDs will come on as in the previous project. With G (gate) open, push the Set key and Reset key and notice that neither one affects the output. Now, close Gate key, and notice that no change occurs in the output. But, while closing Gate key, close Set key and release it, the left LED will go on, indicating the "set" state. While holding Gate key closed, close Reset and release it, the right LED will go on while the left one will go off, indicating the "reset" state.

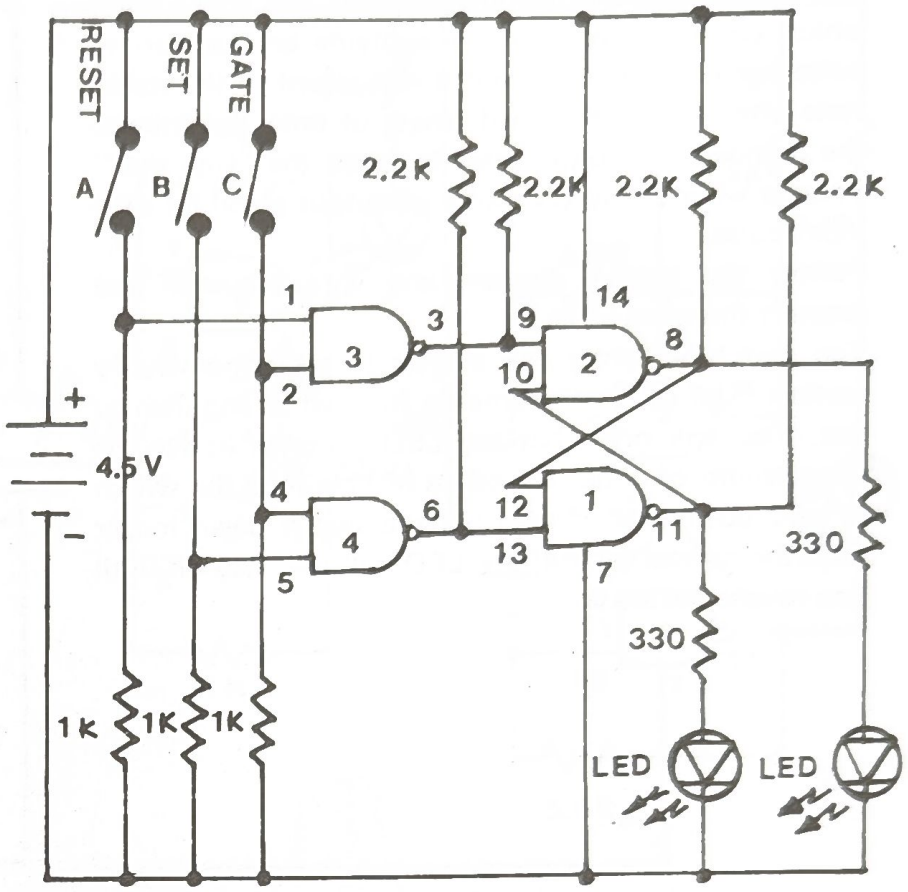

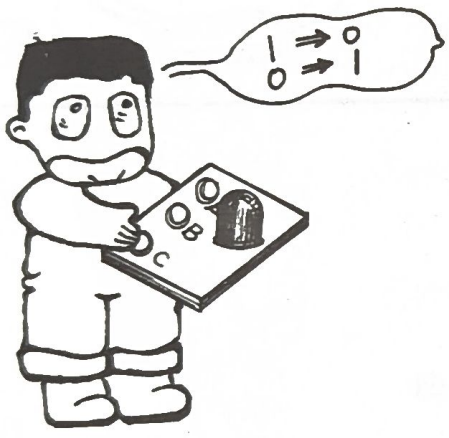

Wire Sequence
1–29–57
2–4–33–61
5–31–59
6–13–21
7–18–40–34–32–30–15
9–3–23
10–11–17–27
14–22–24–26–28–39
39–58–60–62
20–8–12–25

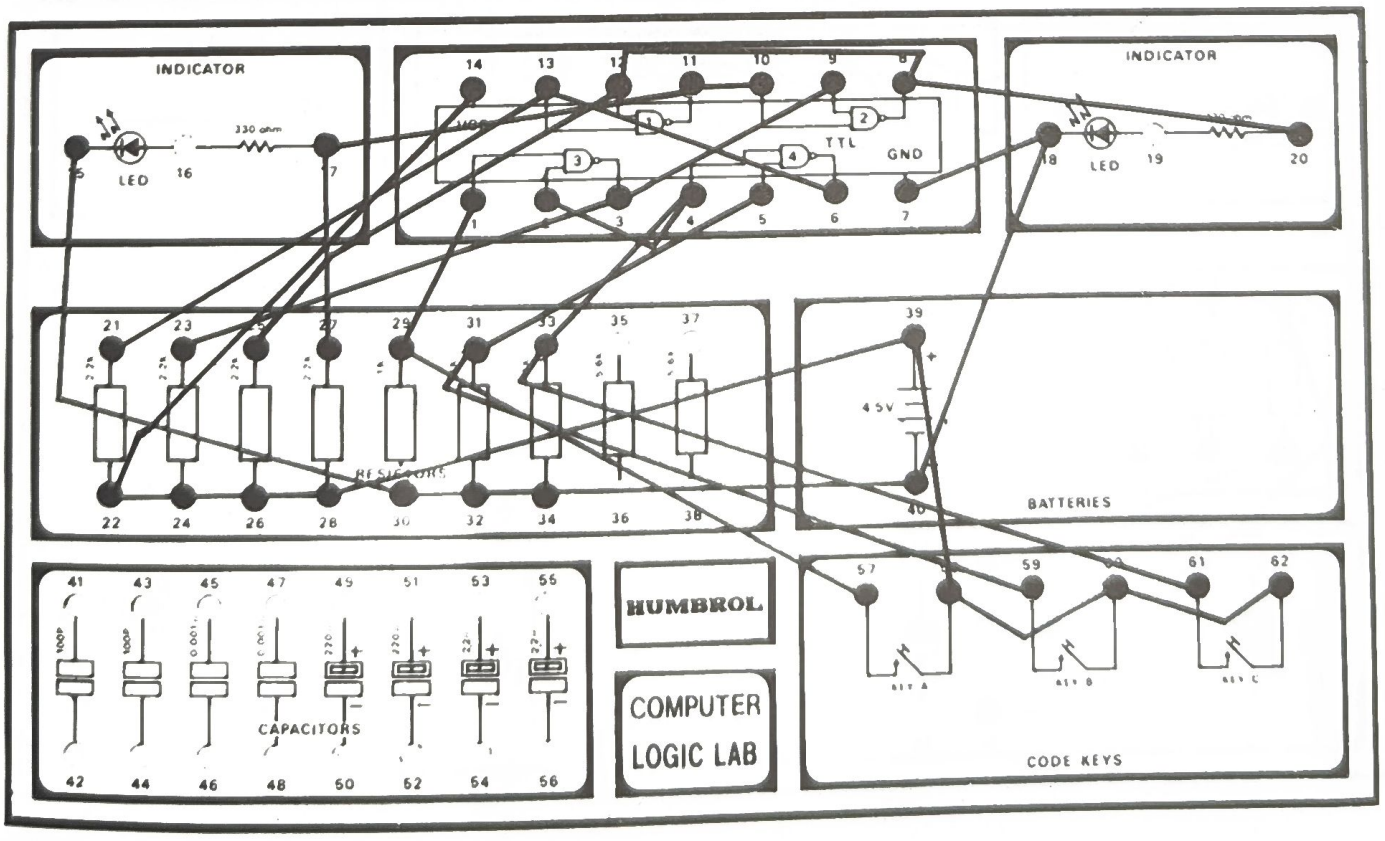

23. THE MONOSTABLE MULTIVIBRATOR

The monostable multivibrator has only one stable state, which can be driven out by applying an appropriate pulse signal at its input, but it will return to the stable state after a predetermined length of time. Sometimes, the monostable multivibrator is called the "One shot" because we get only one pulse of output signal for each input pulse.

Follow the layout diagram and wire sequence and connect the wires carefully.

Tap switch A lightly and shortly to get a momentary contact. The LED will come on for a while and then go out. You will note that the LED will stay lit for the same length of time, regardless of how long the switch is held down. But if we hold the switch down longer than the normal period, the LED will just stay on until you release the switch.

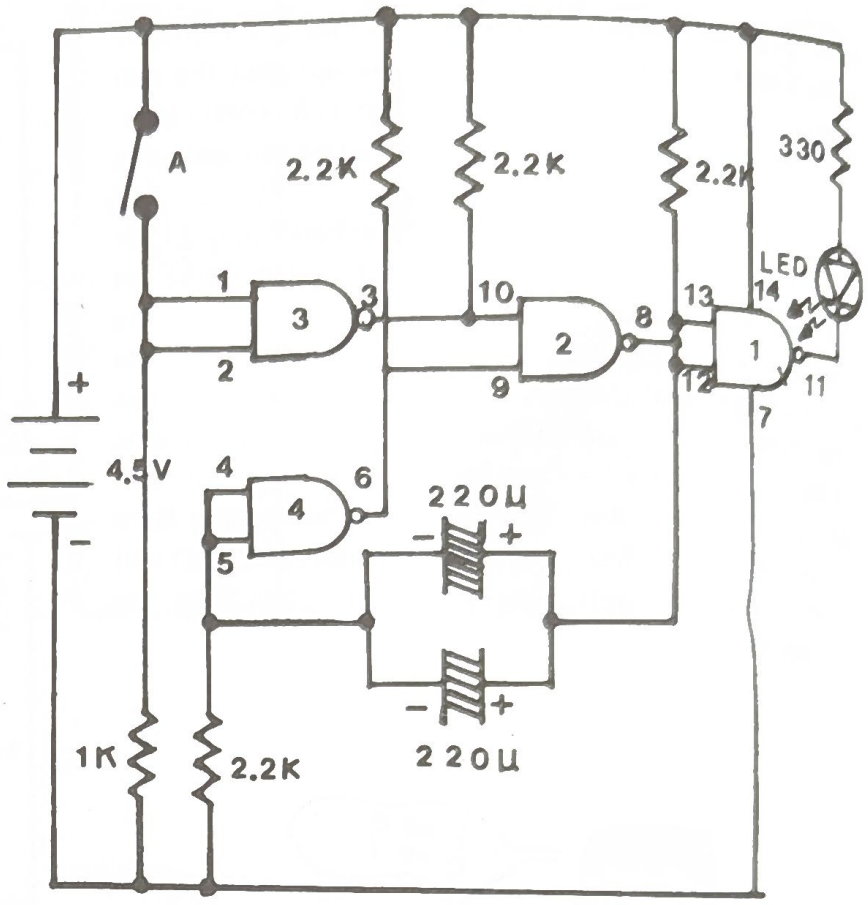

Wire Sequence

1–2–29–57
5–4–21–50–52
7–40–30–22
8–12–13–27–49–51
9–6–23
10–3–25
11–15
14–17–24–26–28–39–58

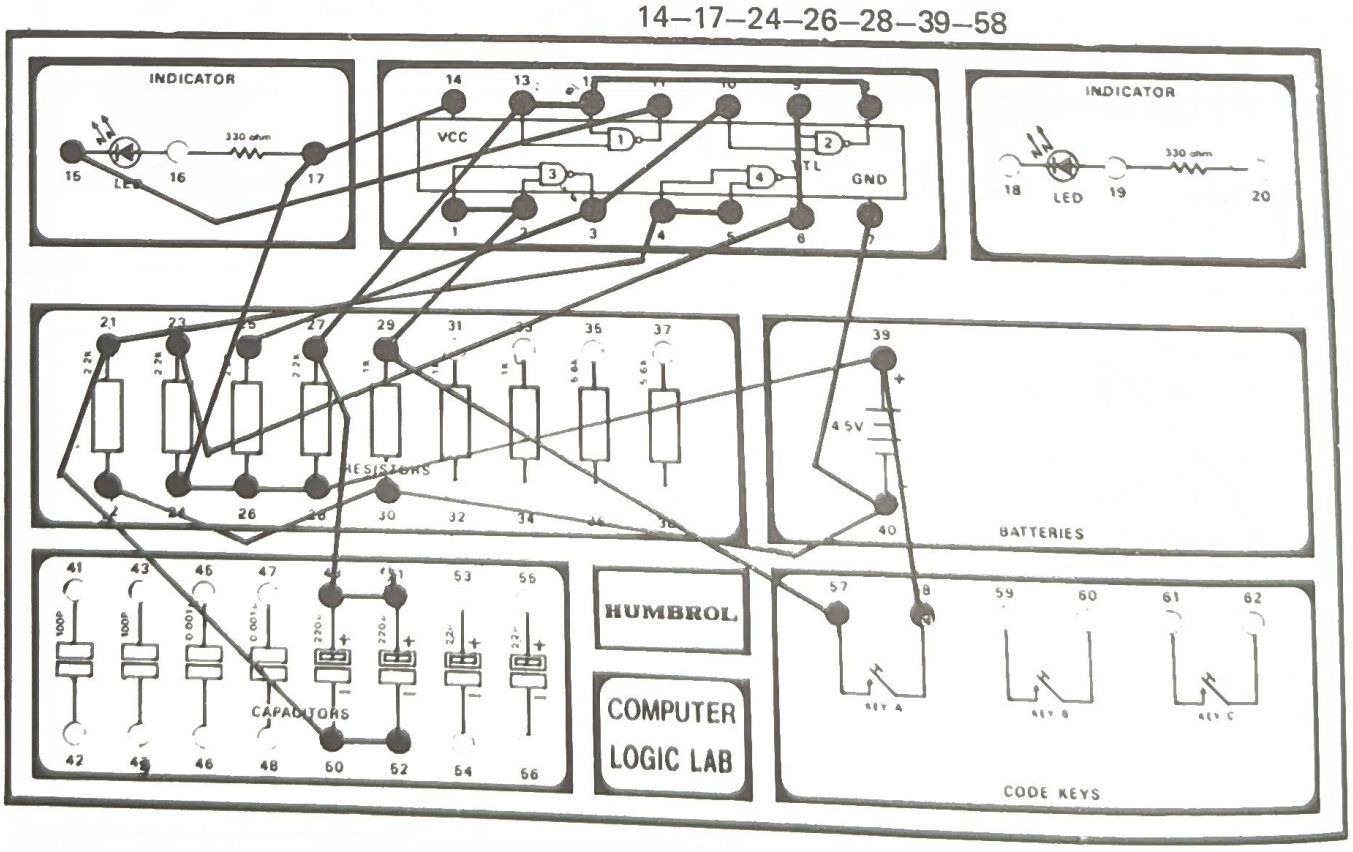

24. FREQUENCY DIVIDER

The Frequency Divider is often used in Digital logic circuits. For example, in digital clocks, frequency counters, digital ohmmeter, digital voltmeter, and many others. Your Frequency Divider is a divide-by-two circuit; that is, if the input frequency of the divider is 10Hz, the output frequency will be 5Hz. Of course, there are dividers that can divde by just about any whole number you want from 2 to 16.

Follow the layout diagram and wire sequence listing and connect the wires carefully. After making all the connections, the LEDs will blink on and off. Note that the left LED is blinking twice as fast as the right LED.

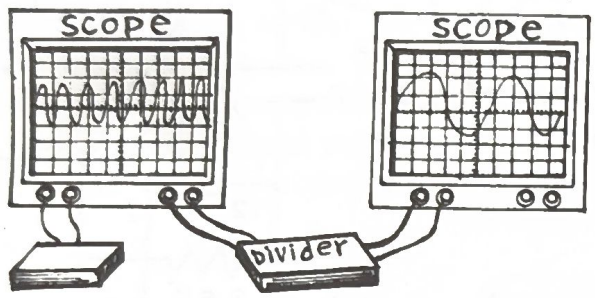

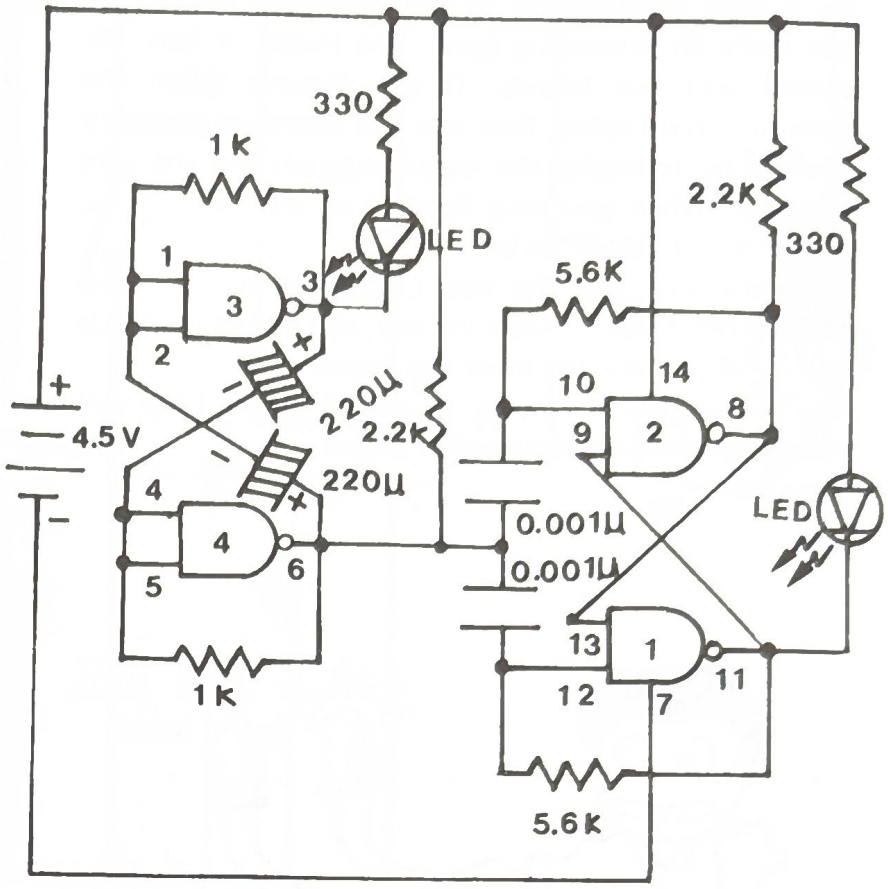

Wire Sequence

1–2–29–50
3–15–30–51
4–5–31–52
6–25–32–45–47–49
7–40
8–13–27–36
10–35–46
12–37–48
14–17–26–28–39–20
18–9–11–38

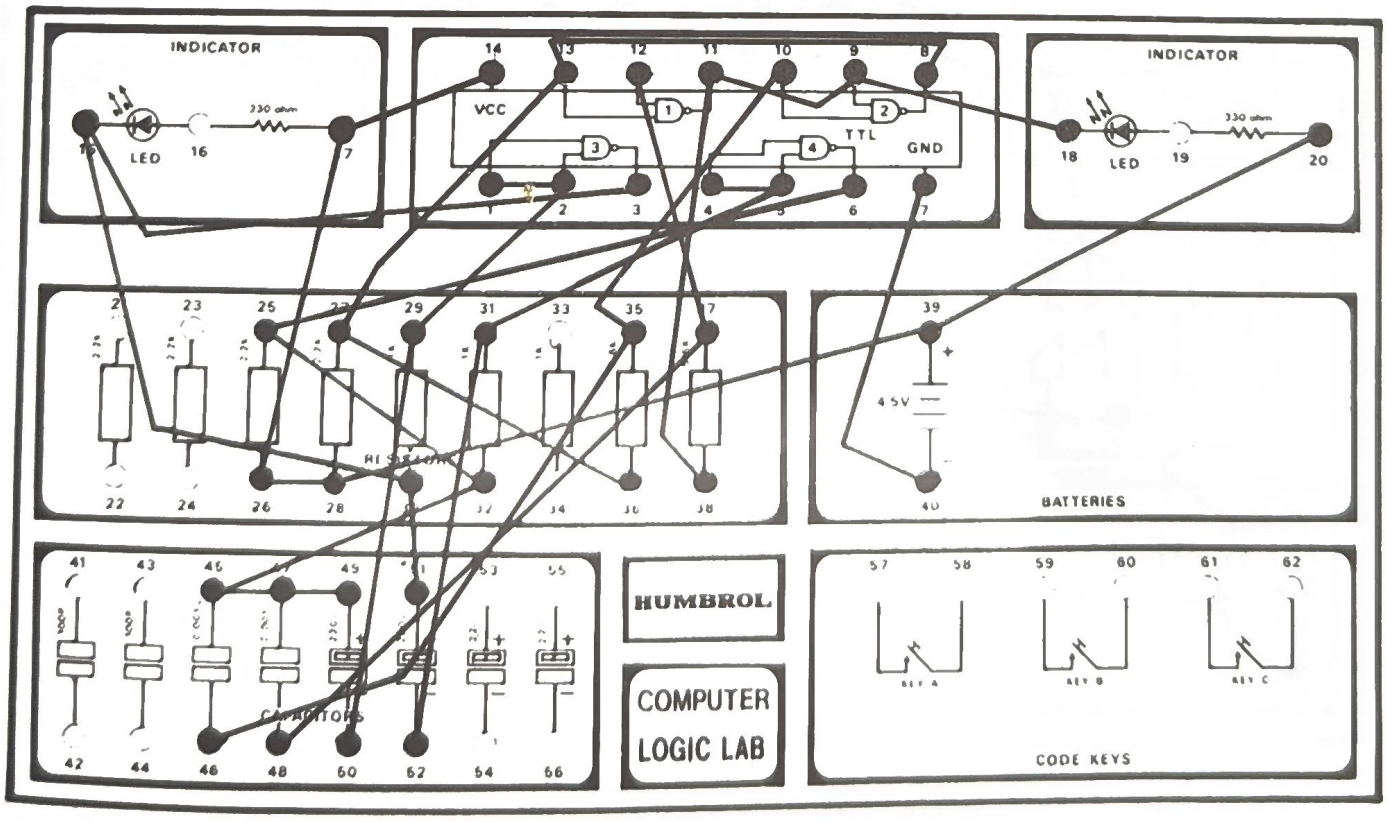

25. HEADS OR TAILS

By a little modification to the frequency divider, we can make an interesting game. The Heads or tails, for ourself and our friends. If you haven't taken the previous circuit apart, then you just make the necessary changes by following the layout diagram and the wire sequence. When you have finished all the connections, one of the LEDs will be on

Close the key, and the two LEDs will blink on and off at a rapid rate. Release the key, and one of the LEDs will remain on and the other will remain off.

The fun comes in trying to predit which LED will remain on when you release the switch.

Have Fun!

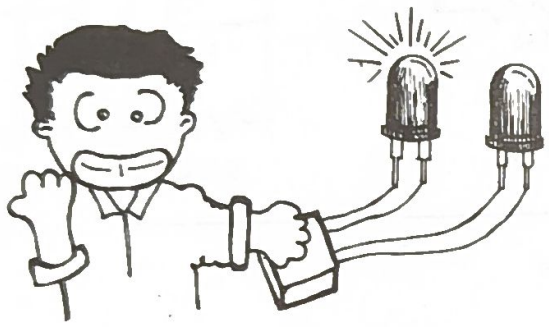

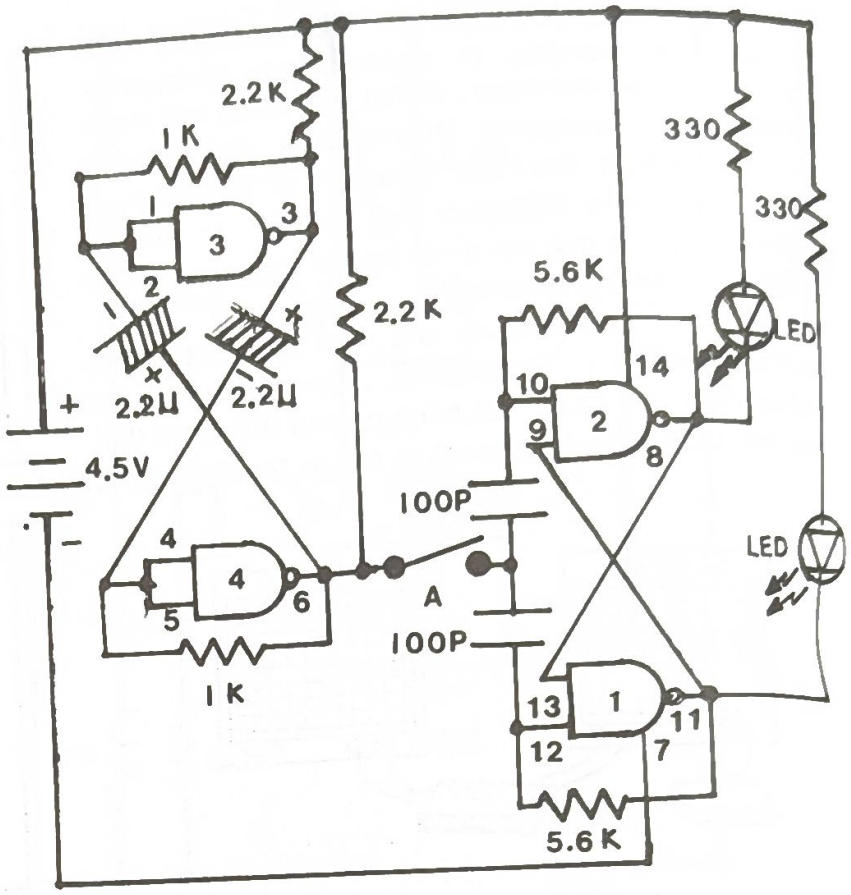

Wire Sequence

1–2–29–54
3–25–30–55
4–5–31–56
6–27–32–53 -58
7–40
10–35–42
12–37–44
14–17–26–28–39–20
15–13–8–36
18–9–11–38
41–43–57

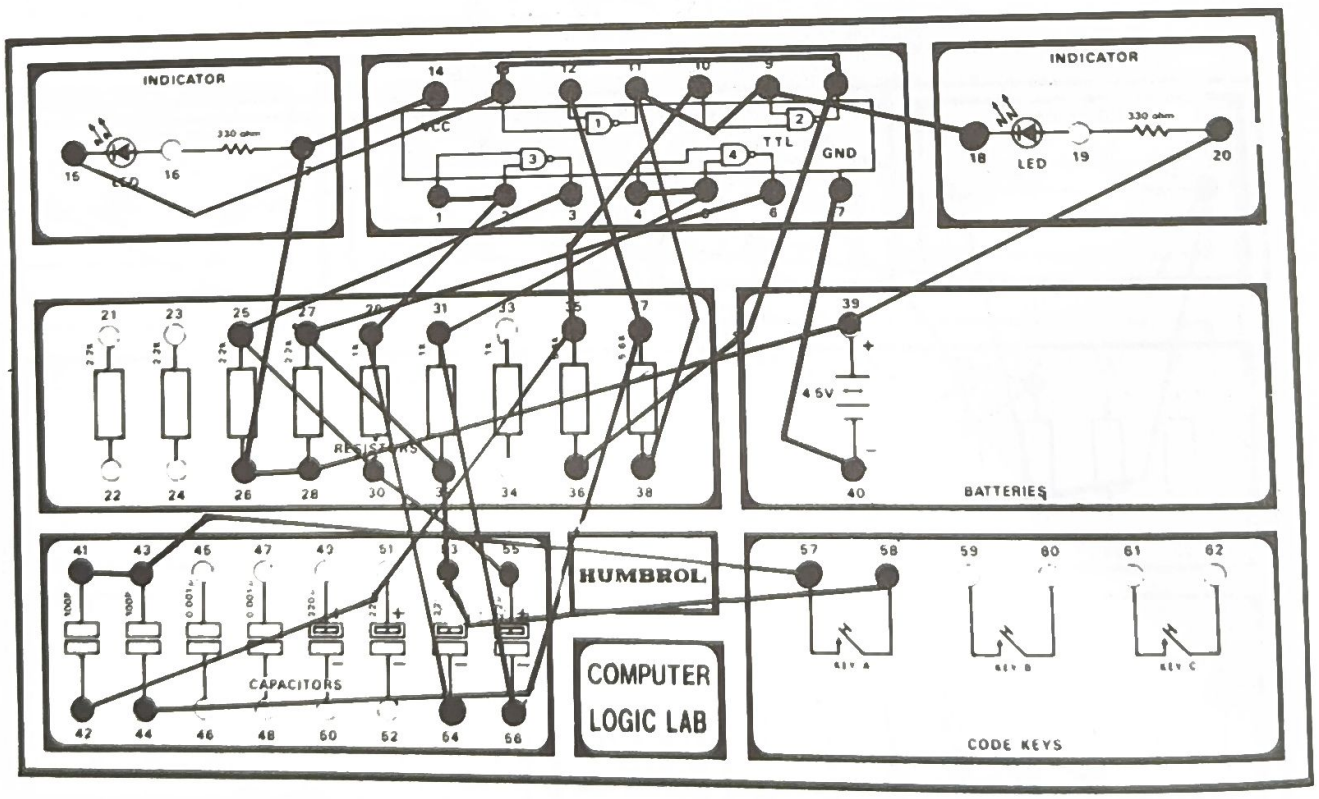

26. ELEC

After comp
you shoul
logic.
Now, we a
an electroni
Look at the
Morse key
charged ver
of first NA
and the inp
second gate
release the
gate and the
12 (one of th
2 seconds), t
output of seco
Try several tin
Is the time be
goes on" dep

26. ELECTRONIC TIMER

After completing the previous experiments one by one, you should understand the basic principles of digital logic.

Now, we are going to use these simple gates to build an electronic timer.

Look at the circuit diagram below. When you press the Morse key (key A), the two parallel capacitors are charged very quickly by the electric current. The input of first NAND gate goes high, the output of first gate and the input of second gate go low, the output of second gate goes high and the LED goes out. When you release the key, the capacitors discharge through the gate and the 1 K resistor. After the voltage level at pin 12 (one of the inputs of first gate) is low enough (about 2 seconds), the output of first gate goes high and the output of second gate goes low, the LED goes on.

Try several times, and then answer this question:

Is the time between "release the switch" and "the LED goes on" depended to the time you are pressing key?

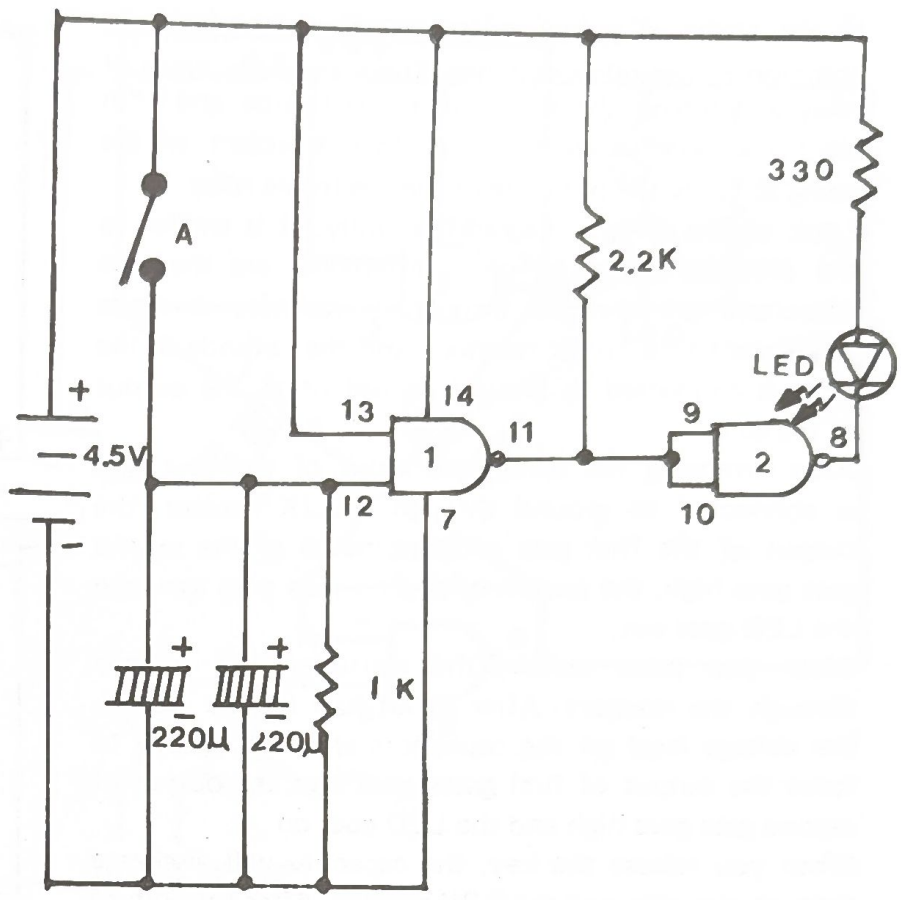

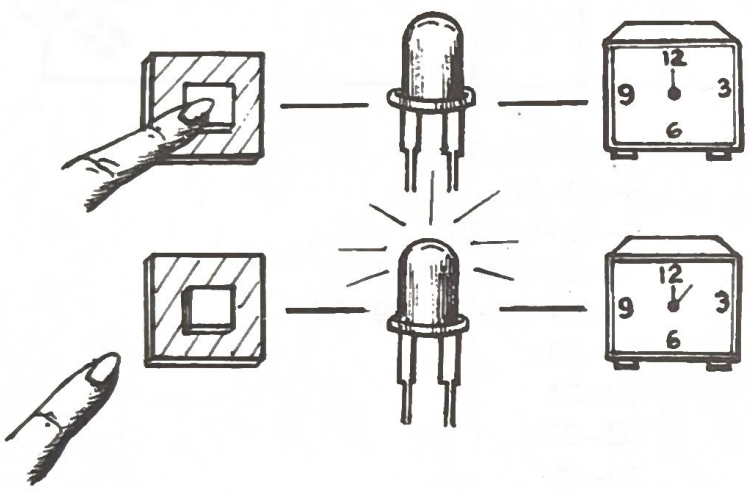

Wire Sequence

7–40–30–50–52
8–15
9–10–11–26
12–29–49–51–57
13–14–17–25–39–58

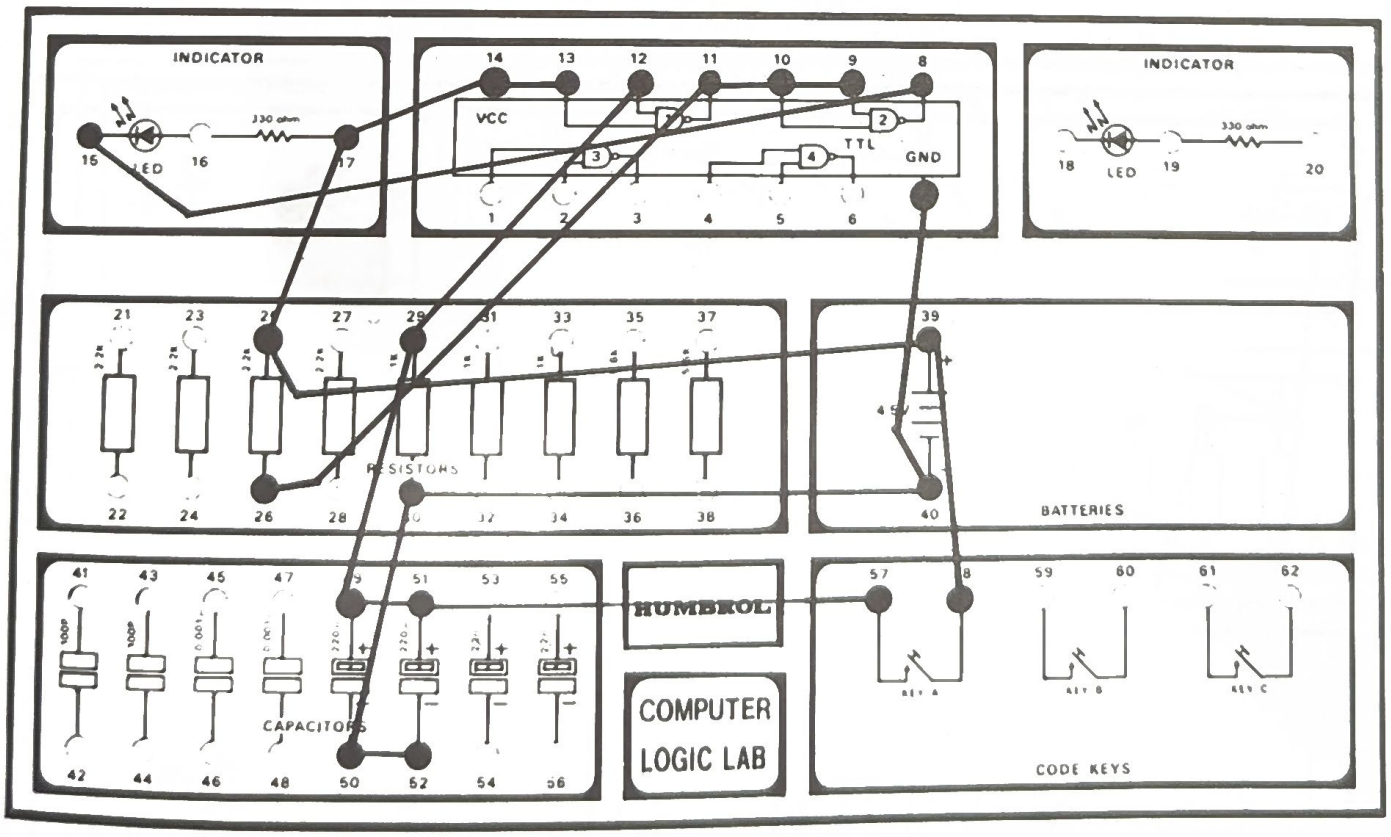

27. THE ELECTRONIC RELAY

In the electrical world, especially the industrial, it is common to use relay switches. There are many kinds of relay switch from the micro side to macro side, and from electronic ones to electric ones. In this project, we are going to study the principle of the electronic relay.

Look at the circuit diagram carefully. It is similar to the previous one. The only differences are that the capacitors are charged through 6 resistors in series (equivalent to a 10.8K resistor), and the cathode of the LED is connected to ground instead of to the output of the gate.

After arranging the wires, the input of the first gate is connected to ground through a 2.2K resistor, the output of the first gate and the inputs of the second gate goes high, the output of second gate goes low, and the LED goes out.

When you press switch, the capacitors are charged through the resistors. After about half to one second, the voltage level on the capacitors are high enough to force the output of first gates goes low, the output of second gate goes high and the LED goes on.

When you release the key, the capacitor will discharge through the gate and the 2.2K resistor. After the voltage level of the capacitors are low enough, the LED goes out. After 10 or more seconds (to let the electricity wholly discharged through resistor 2.2K), you may press the switch again, after two to five second, the LED will be on again.

It is noted that if you have troubles with this experiment, please replace the batteries with some new ones.

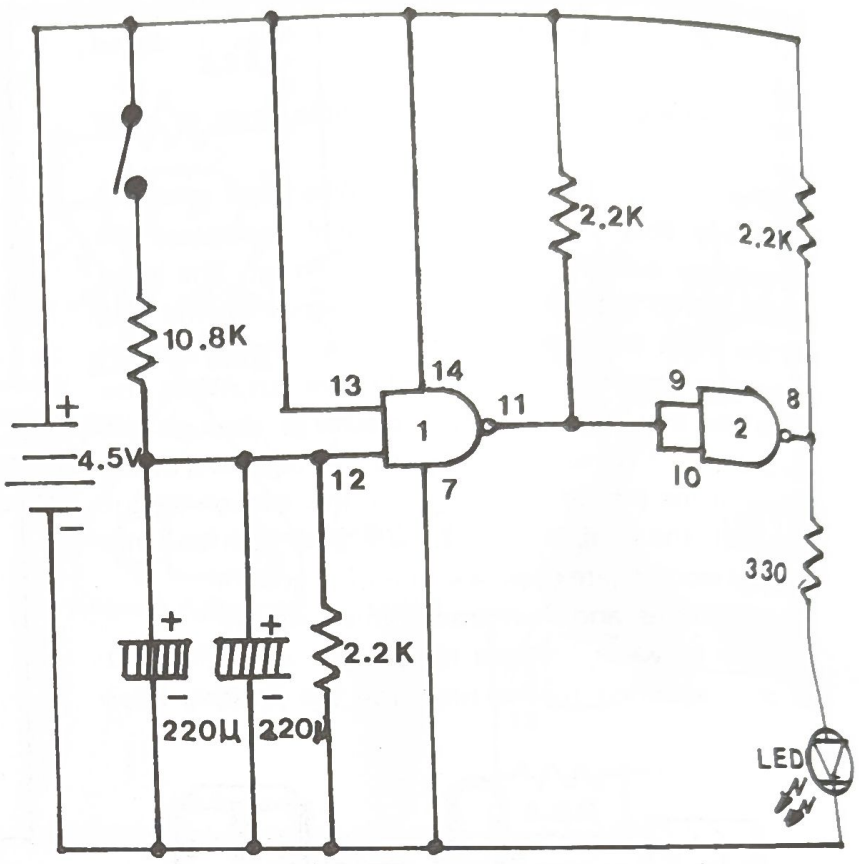

Wire Sequence
7–40–52–50–22–15
8–28–17
9–10–11–26
12–21–23–49–51
13–14–25–27–39–58
24–29
30–31
32–33
34–35
36–57

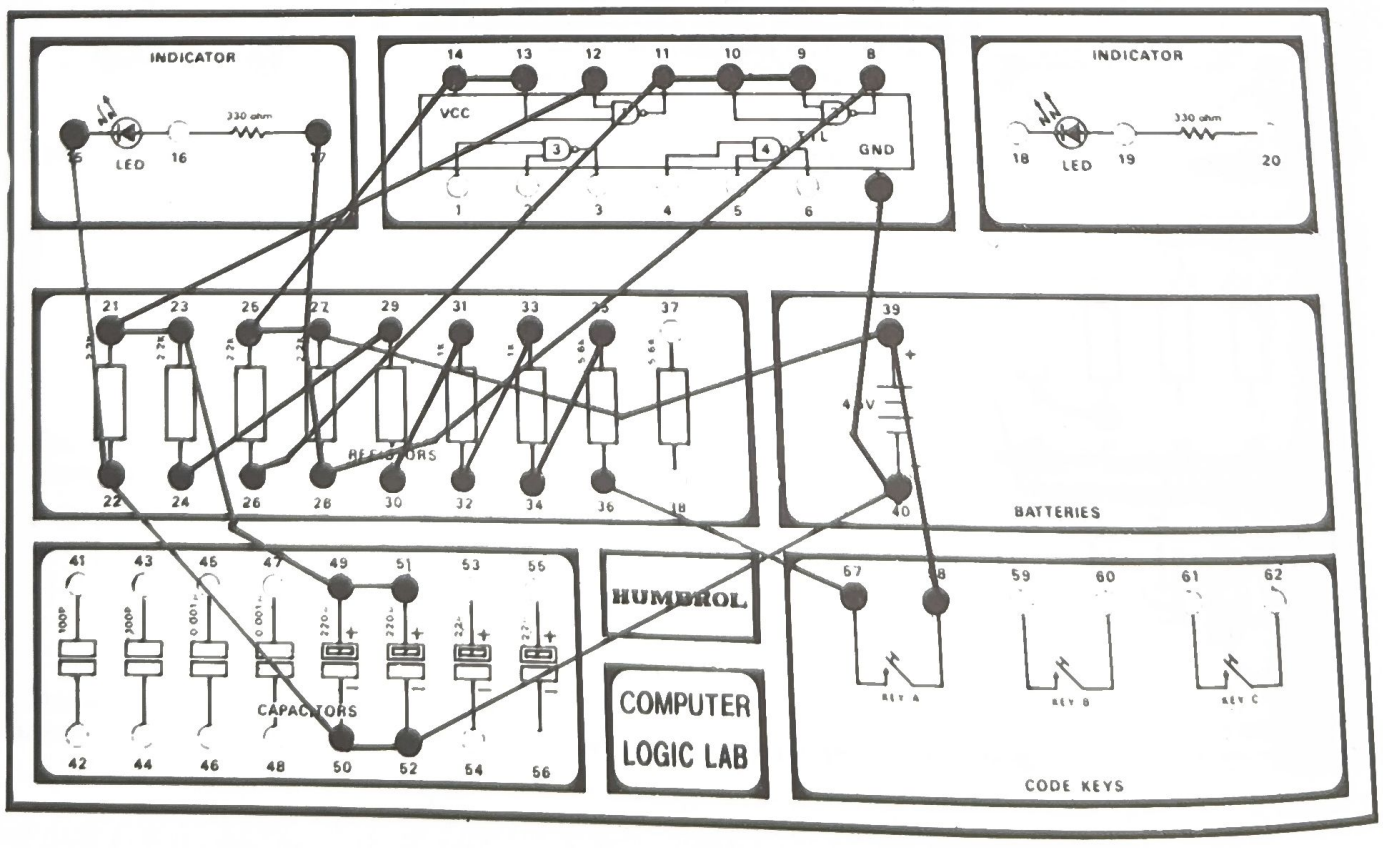

28. CIRCUIT DISCONNECT WARNING DEVICE

The circuit disconnect warning device can be used in many applications. For example, it can be used as a theft alarm, a connect and disconnect meter, etc.
Look at the circuit diagram. It is principally an unstable multivibrator with a control gate. When the gate (pin 5) is low, the multivibrator goes out, the LED is out. When the gate is high (connected to 4.5V or just letting it free), the multivibrator goes on, and the LED flashes.
Run two long wires, one end of each wire connect to spring 5 and 7 respectively. With the other end of the two wires, you may test any two point to see if they are connected or not. If they are connected, the LED will out, if not, the LED will flash as before.
Try it and you will get fun!

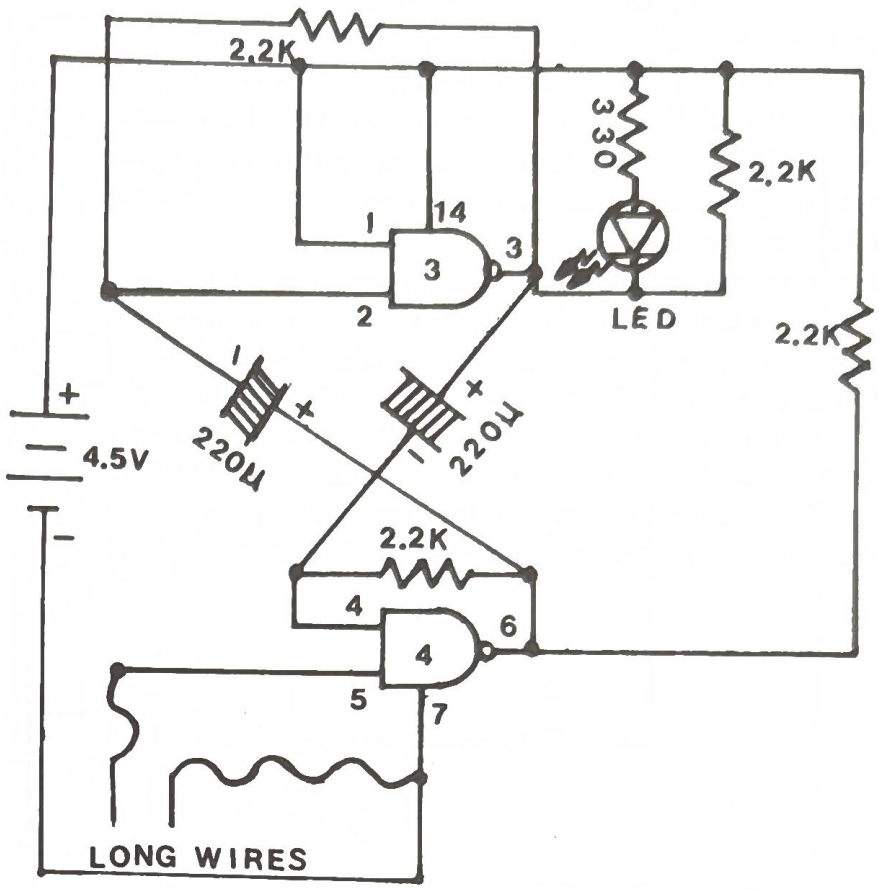

Wire Sequence
1–14–17–25–39
2–23–50
3–51–26–24
4–21–52
6–49–28–22–15
7–40
5-Longwire
7-Longwire

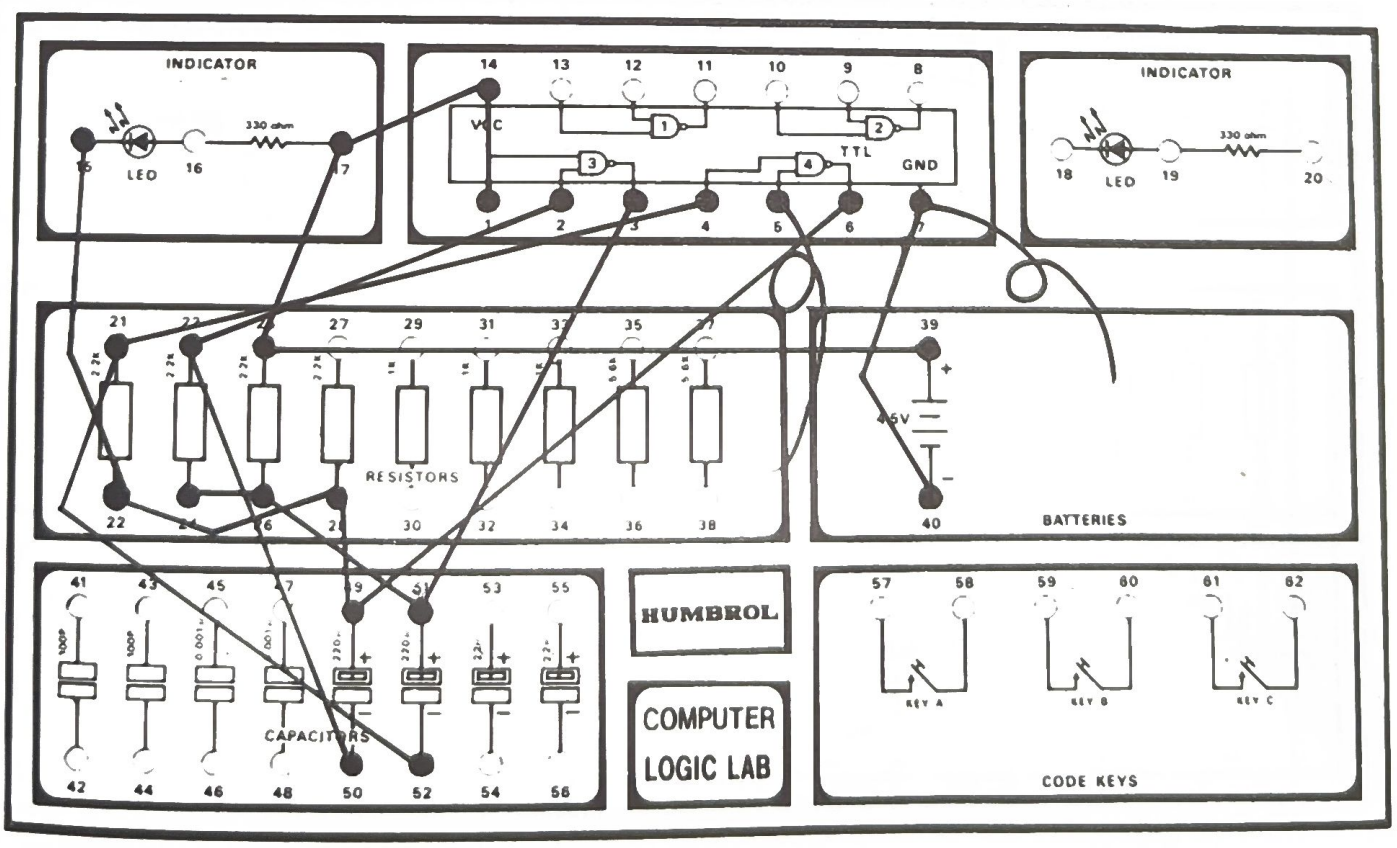

29. LED BRIGHTNESS CONTROLLER

There are many ways to control the brightness of a LED or lamp. For example, by varying the duty cycle of a 555 timer, we can control the lightness from a 50% to a 99%; by using the SCR or the TRIAC, we can control the lightness of a lamp, etc. In this project, we are going to study how to control the brightness of the LED using resistors.

Look at the circuit diagram carefully. The two inputs of the NAND gate is connected to positive, thus the output will be negative, but the LED will not on, since there is no way for the electric current to go through. Press key A, key B and key C respectively, can you find which of them will make the LED lightest? Why? With a smaller resistor, in this case, 300 ohm, more current can pass through it, and the LED is brighter.

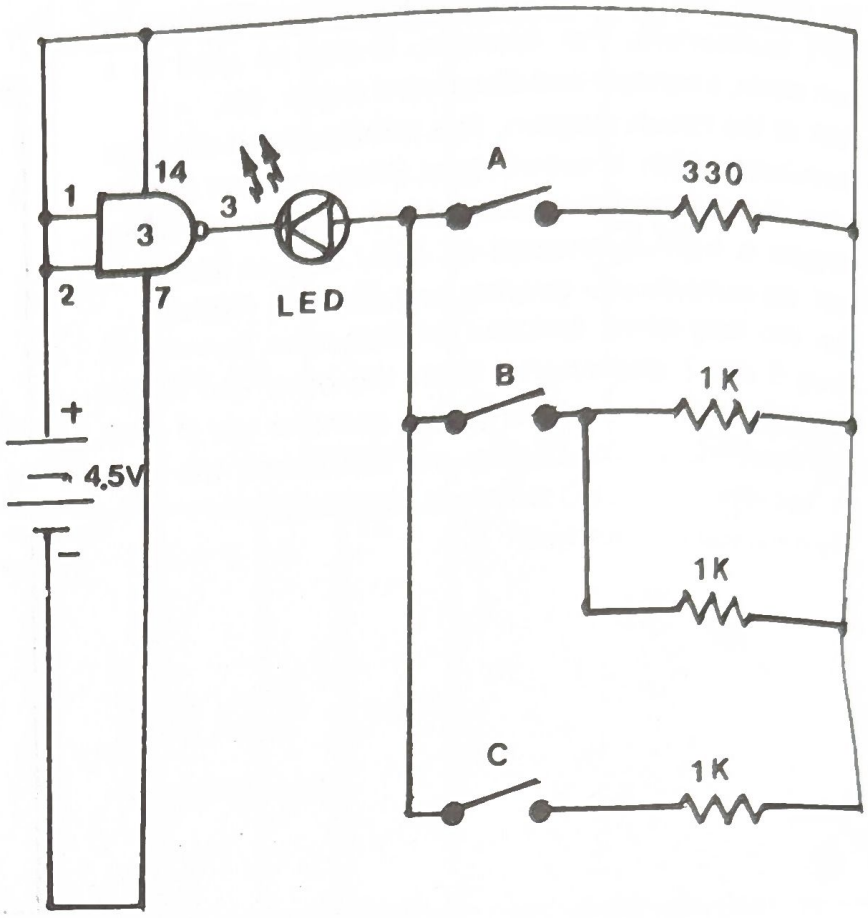

Wire Sequence

1–2–14–16–30–32–34–39
3–18
7–40
17–58
19–57–59–61
29–31–60
33–62

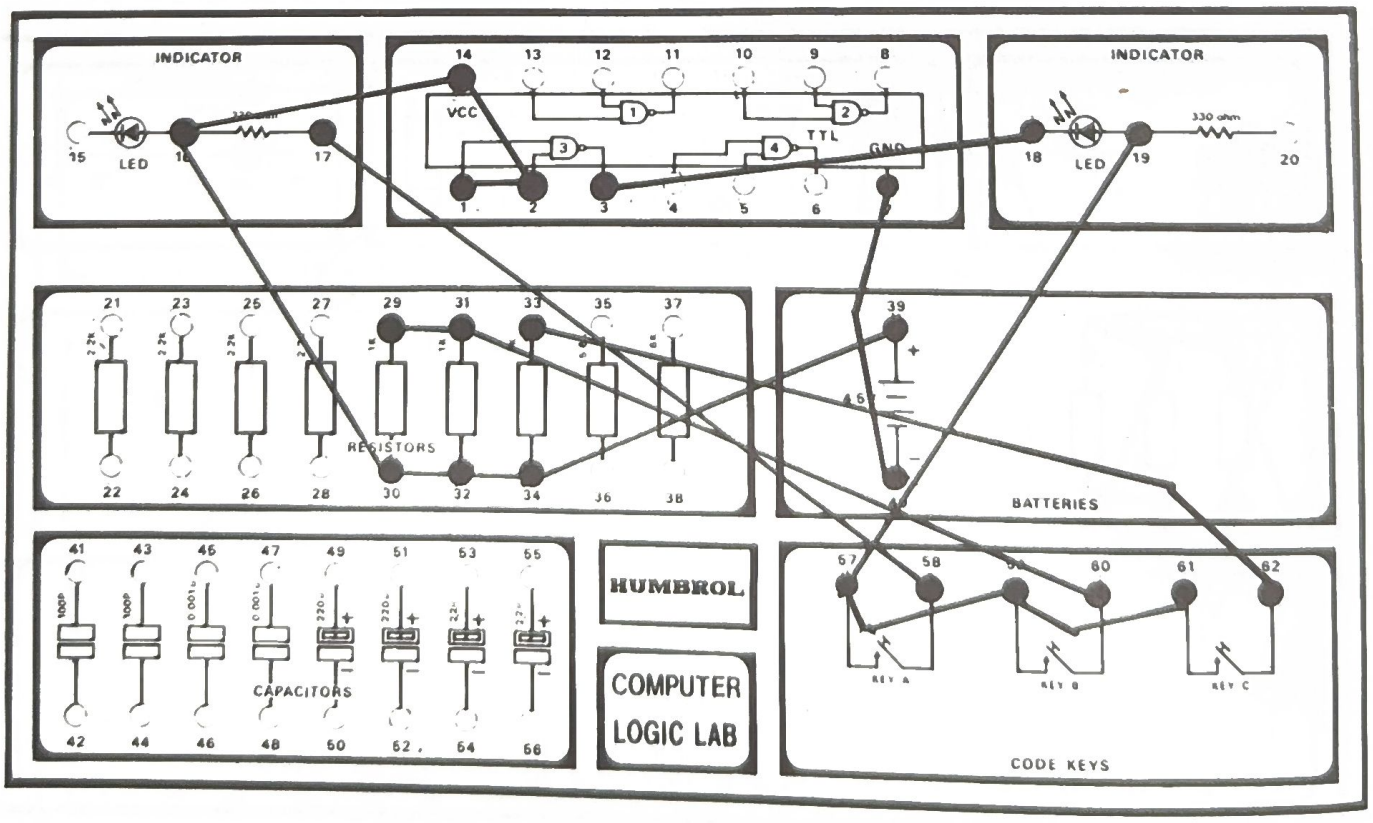

30. LIGHT CONTROL – USING TTL

In the previous project, we have learned how to control the brightness of a LED using resistors. In this project, we will study how to control it using the buffers.

Look at the circuit diagram, the 8 inputs of the NAND gates are high, so that all of the outputs will go low. But all the three switches are open, thus, there is only one buffer that can sink the electric current, so the current is limited by the 1K resistor, thus the LED would not light fully. Press and release the keys, or press two key at one time to see changes of the brightness of LED.

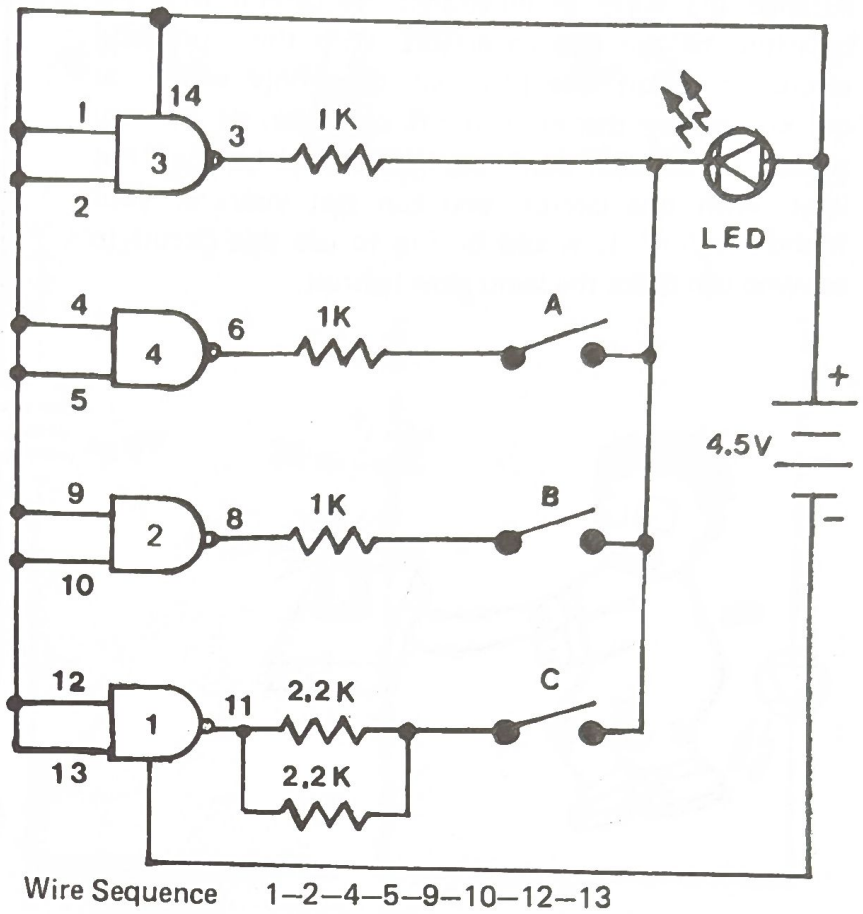

Wire Sequence 1–2–4–5–9–10–12–13
13–14–16–39
3–29
6–31
7–40
8–33
11–25–27
15–30–57–59–61
26–28–62
32–58
34–60

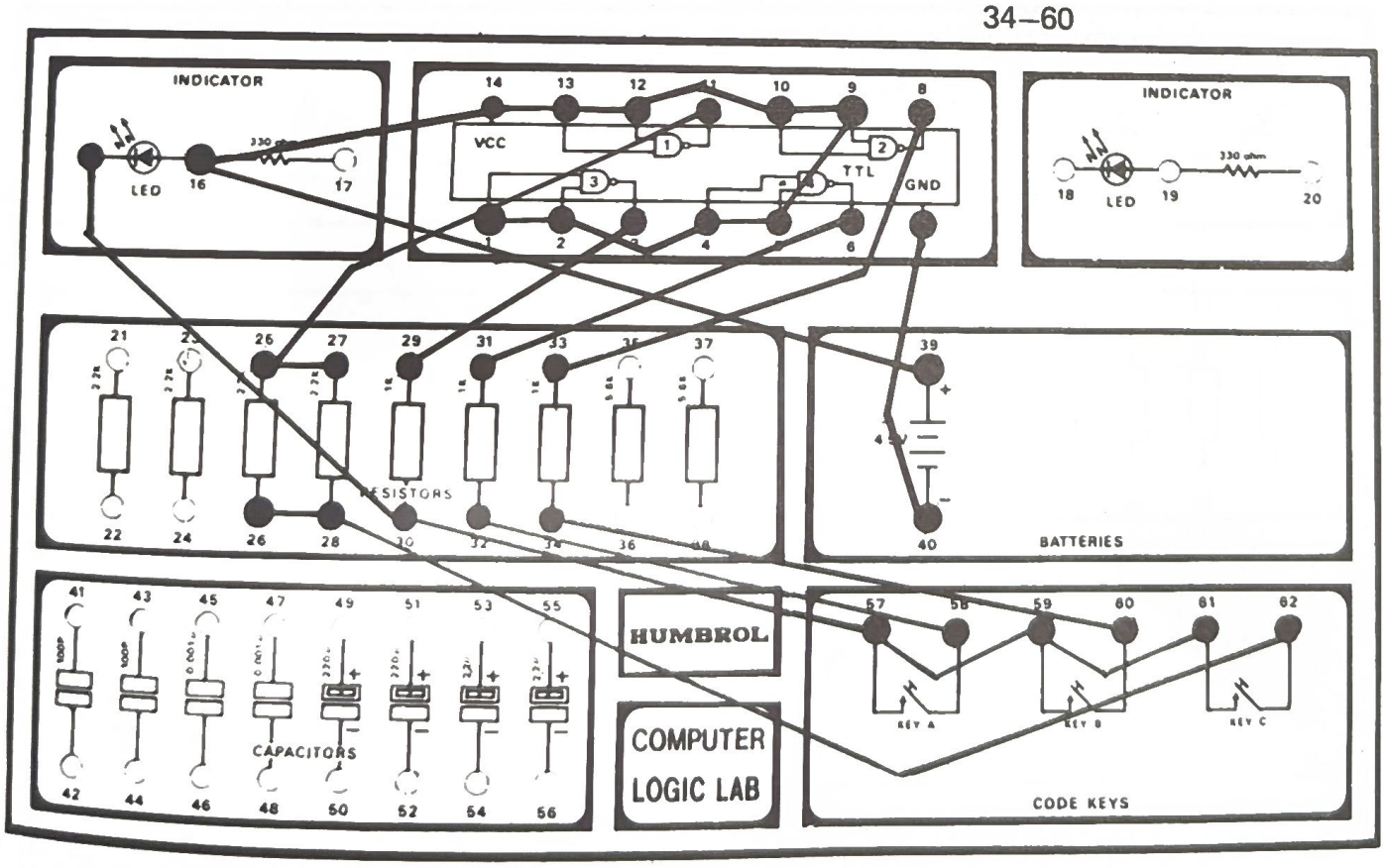

31. PHYSICAL AGILITY TESTER

Arrange the wires as illustrated. Be careful with the polarities of the two capacitors. With this wonderful electronic circuit, the LED will glow only when you quickly repeat the on and off operation of the key switch. If you slow down the motion the LED will not light With this circuit, you can test yours, or your friend's agility. It would be fun to use this circuit to see who can make the lamp glow lightest.

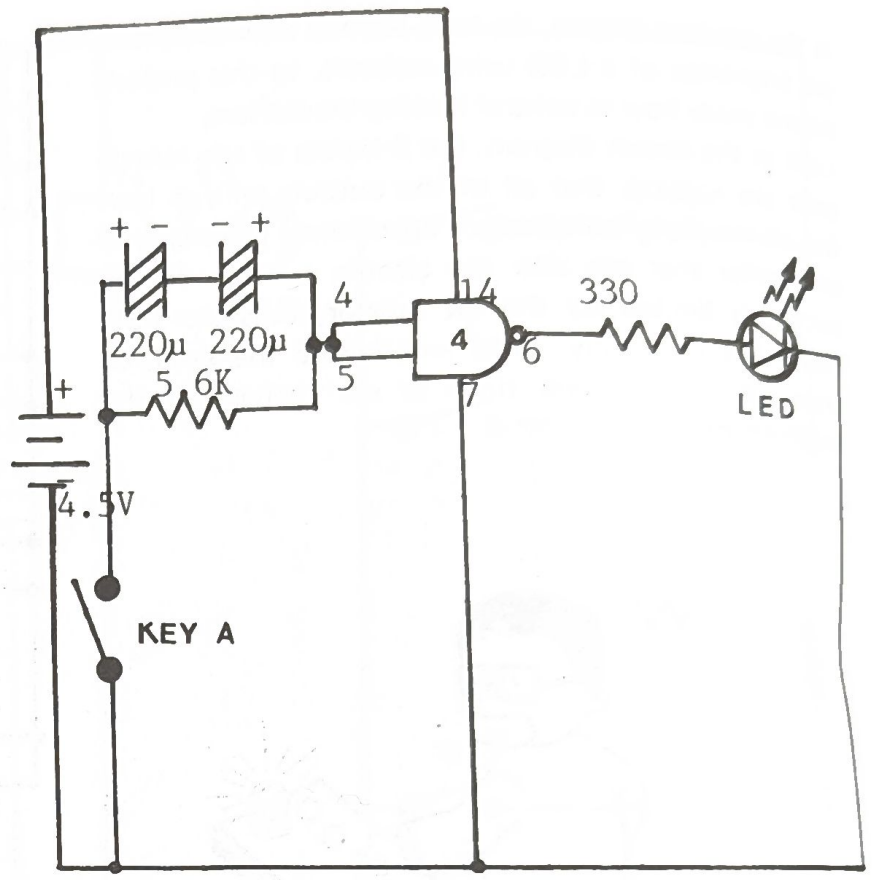

Wire Sequence

4–5–35–49
6–20
7–18–40–58
14–39
36–51–57
50–52

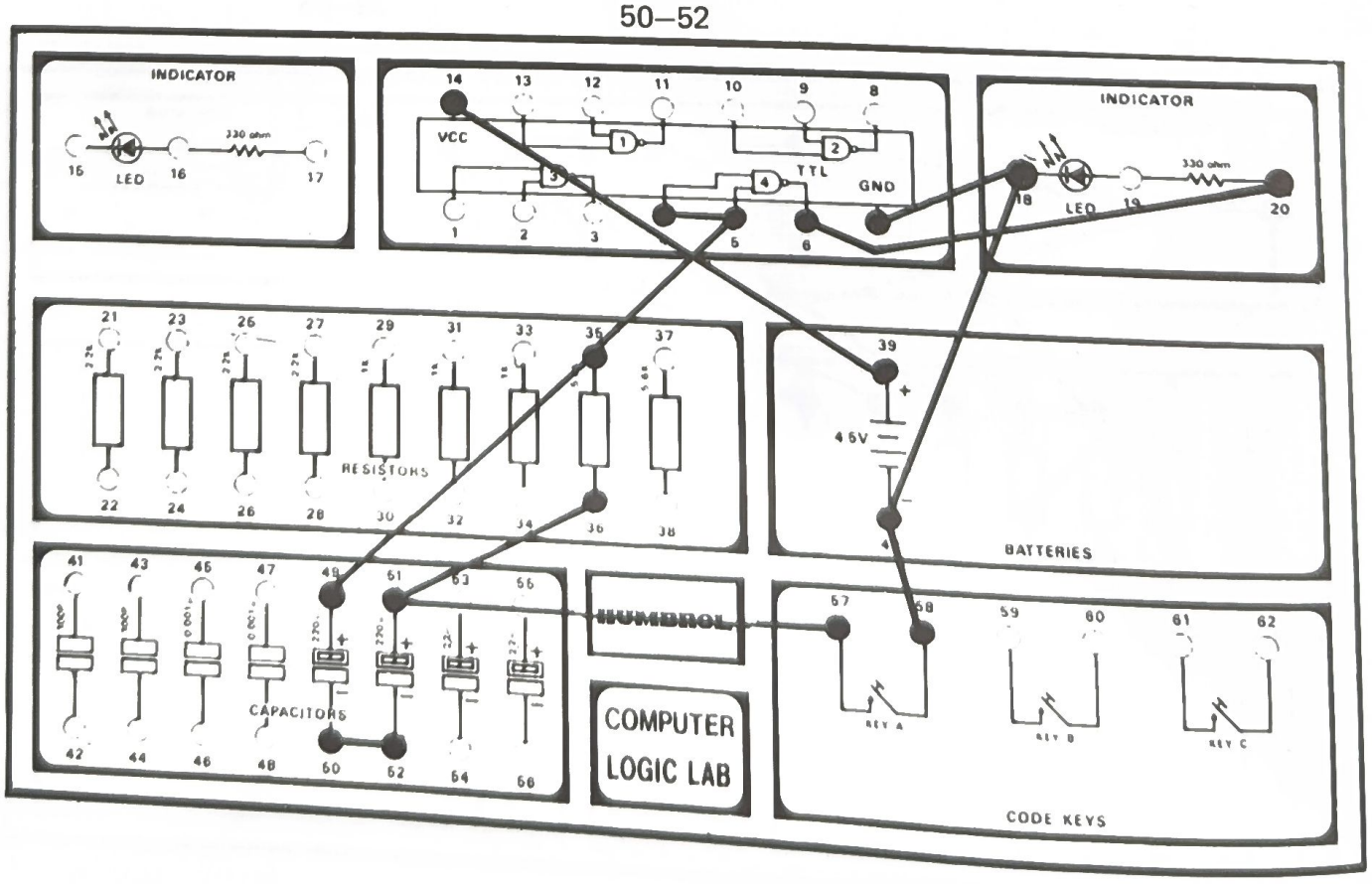

32. CHARGING AND DISCHARGING OF CAPACITORS

There are many kinds of capacitors, such as paper, ceramic, mylar, and oil capacitors, for instance. Here we will experiment with the charging and discharging of an electrolytic capacitor.

Arrange the wires as illustrated. First, depress key A, the right-LED will glow for a short time, due to the charging of the capacitor. Release key A and press key B and the left-LED will glow for a short time due to the discharging of the capacitor.

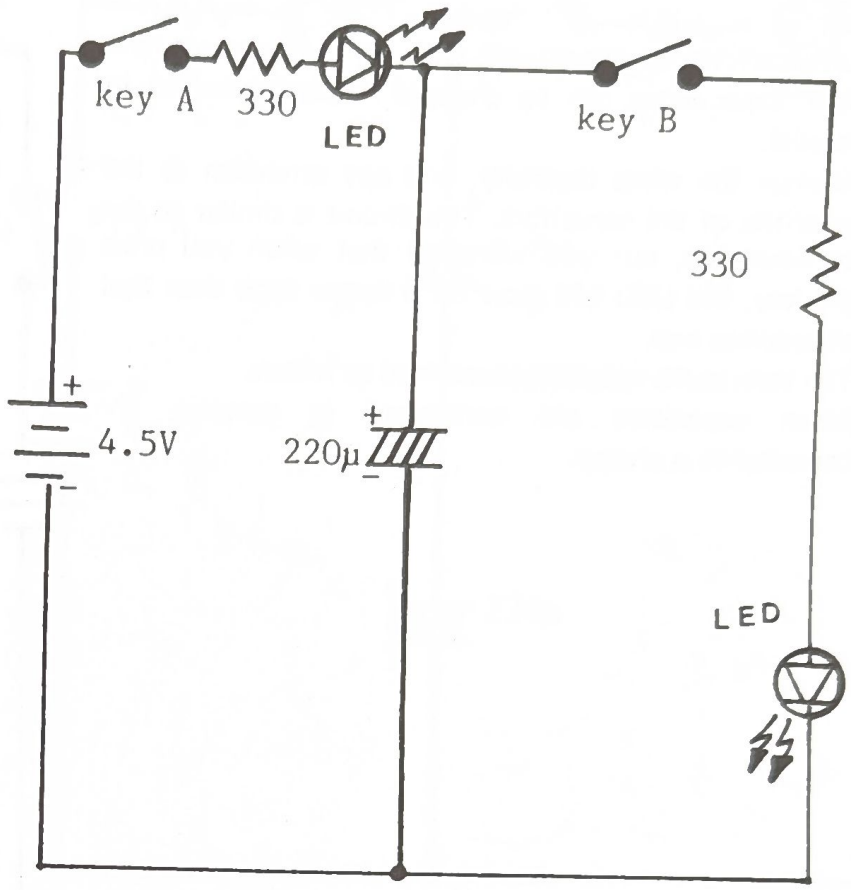

Wire Sequence

15–40–50
17–60
18–59–49
20–58
39–57

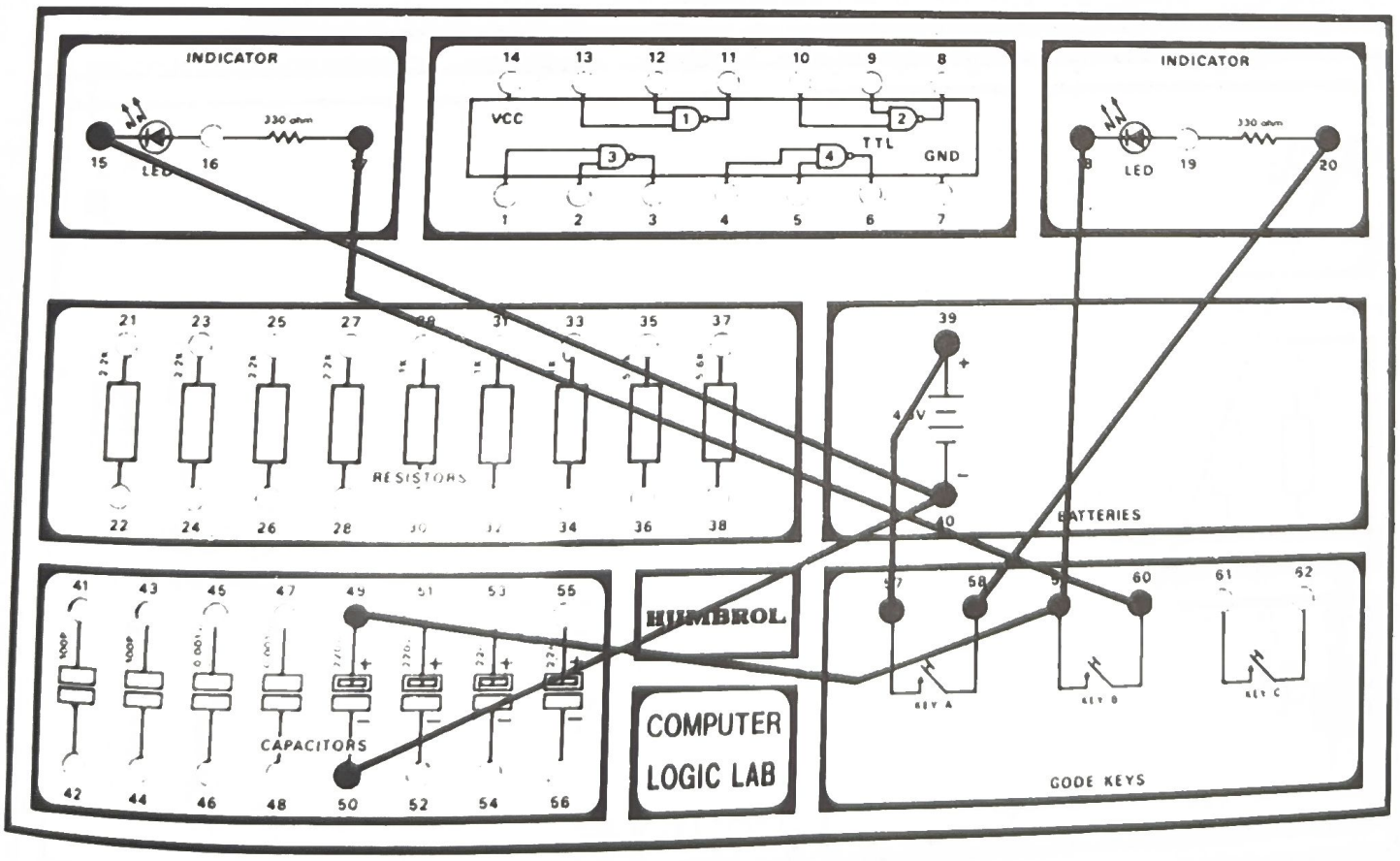

33. PARALLEL CONNECTIONS OF CAPACITORS

Let's perform an experiment with capacitors to see how their capacitance can be changed when connected in parallel.

Arrange the wires carefully, and pay attention to the polarities of the capacitors. This circuit is similar to the previous one, but you will find that when you press the key, the LED will glow for a longer time than that of previous one.

The test results may be summarized as follow.

When capacitors are connected in parallel, the capacitance is greater.

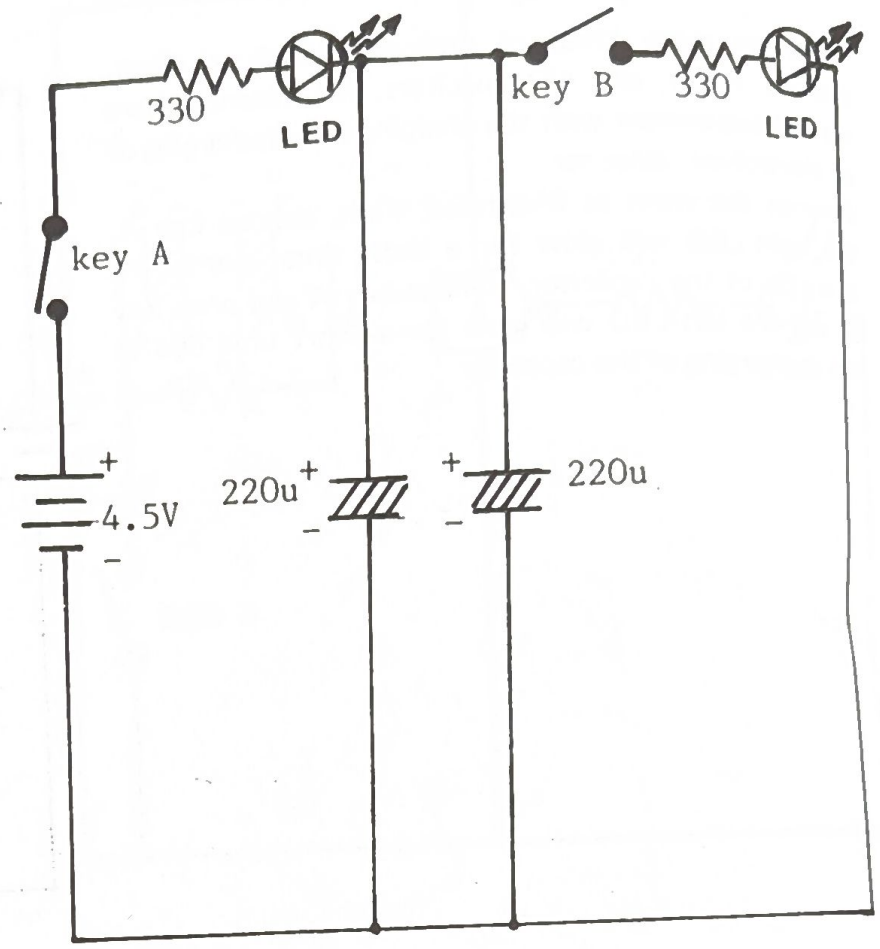

Wire Sequence

15–50–52–40
17–60
18–59–51–49
20–58
39–57

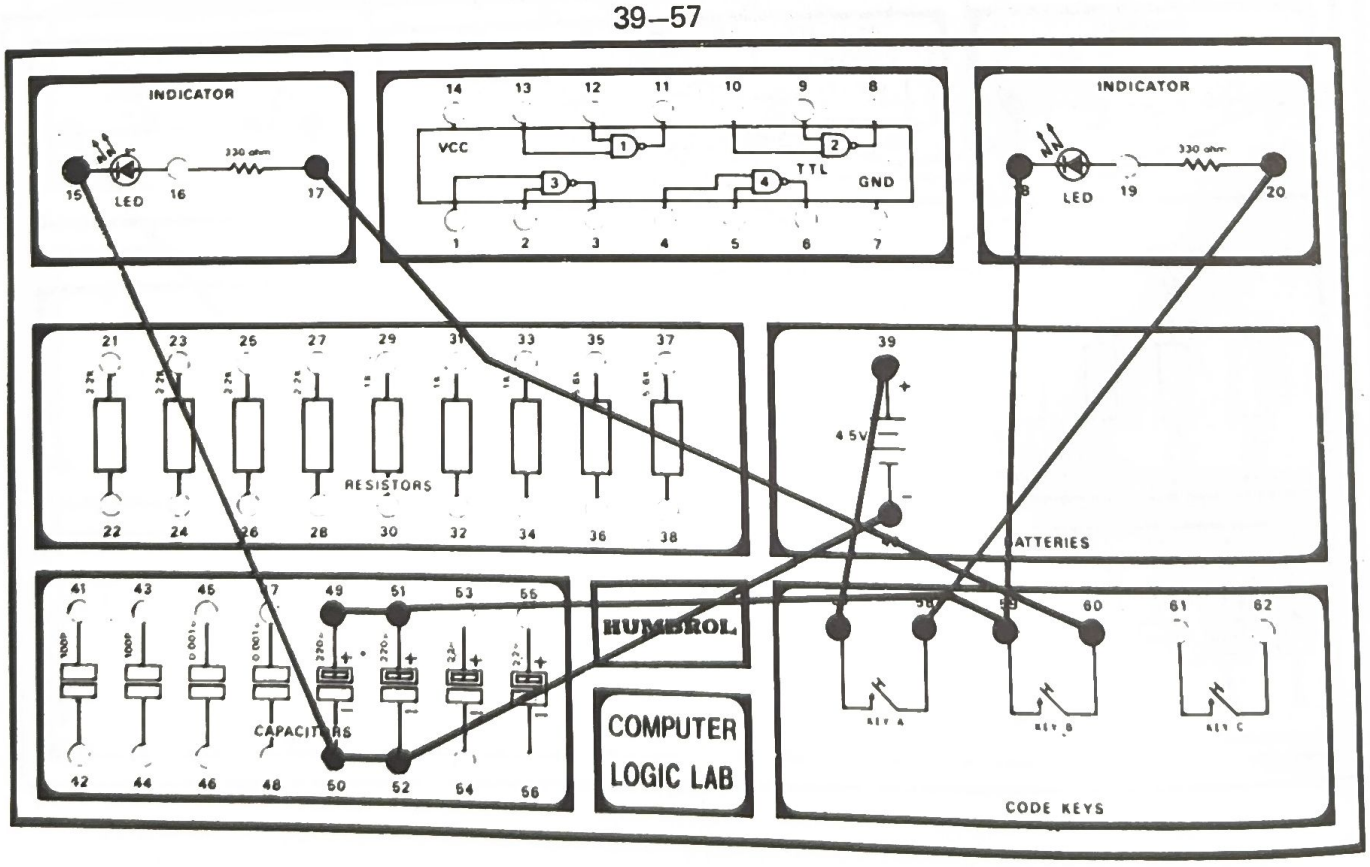

34. SERIES CONNECTIONS OF CAPACITORS

We have performed an experiment with capacitor in parallel connection and found out that the capacitors connected in parallel, the capacitance is greater.
Now, let's do an experiment with capacitors connected in series and see what the result is. When arranging the wire connections be careful with the polarities of the capacitors. Press the key. Do you find that the LEDs glow for a shorter time than the previous two experiments? The test result may be summarized as follow.
When capacitors are connected in series, the capacitance becomes smaller.

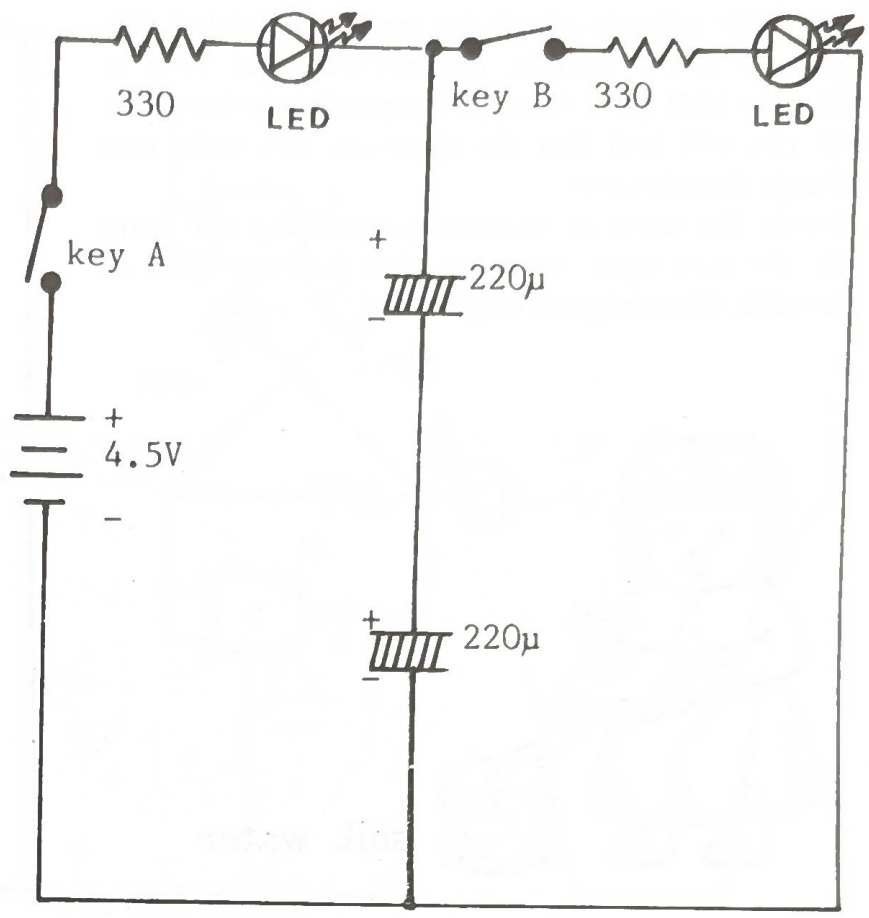

Wire Sequence

15–40–52
17–60
18–59–49
20–58
39–57
50–51

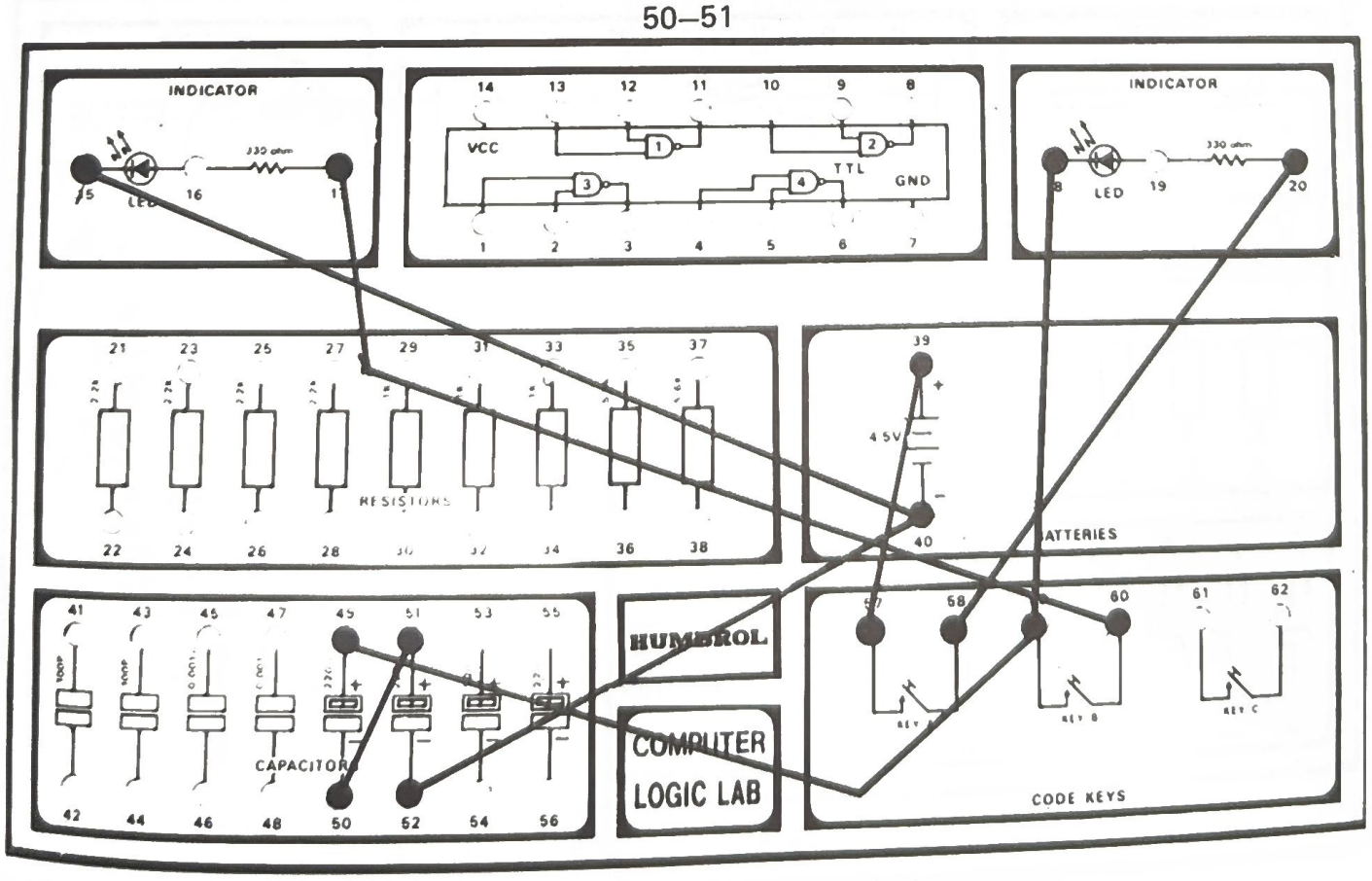

35. ELECTRIC CURRENT FLOW IN SALT WATER

Pure water scarcely allows the passage of electric current, and in our circuits, this current is too little to make the LED glow. Now, put some salt into the water, and you will find that the electricity can easily pass through the salt water.
Arrange the wires as illustrated. Insert the two wires into the pure water, what happens? Add some salt to the water. What happens now?

salt water

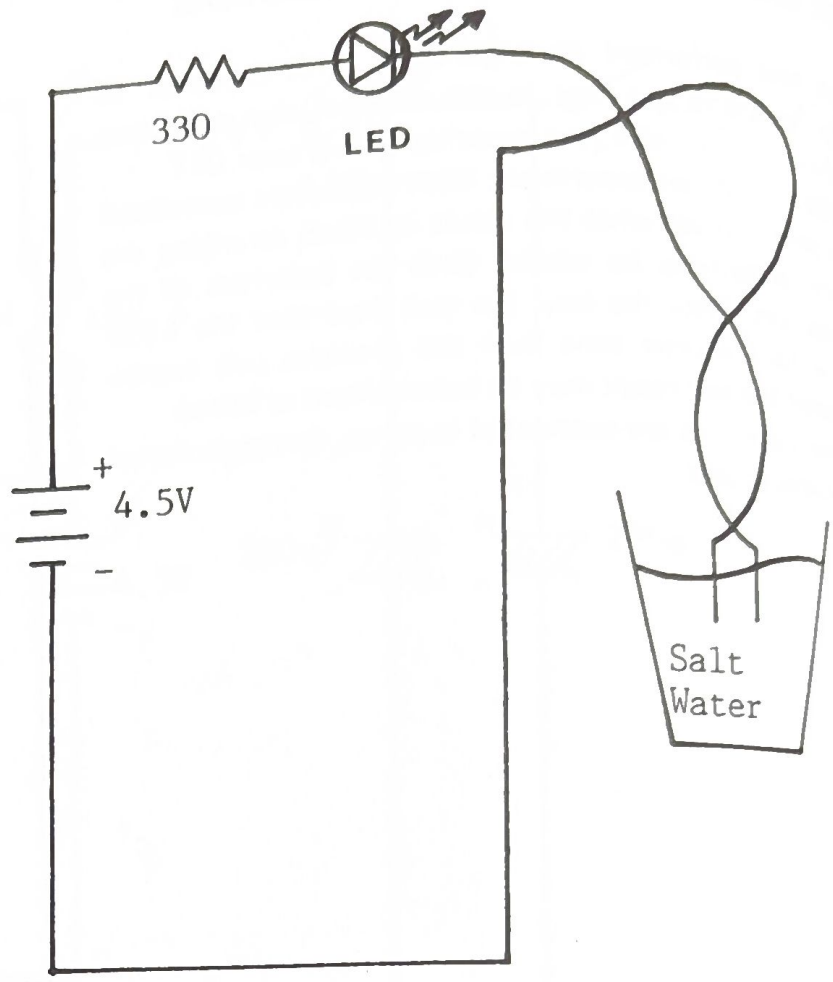

Wire Sequence

20–39

18 → Long wire

40 → Long wire

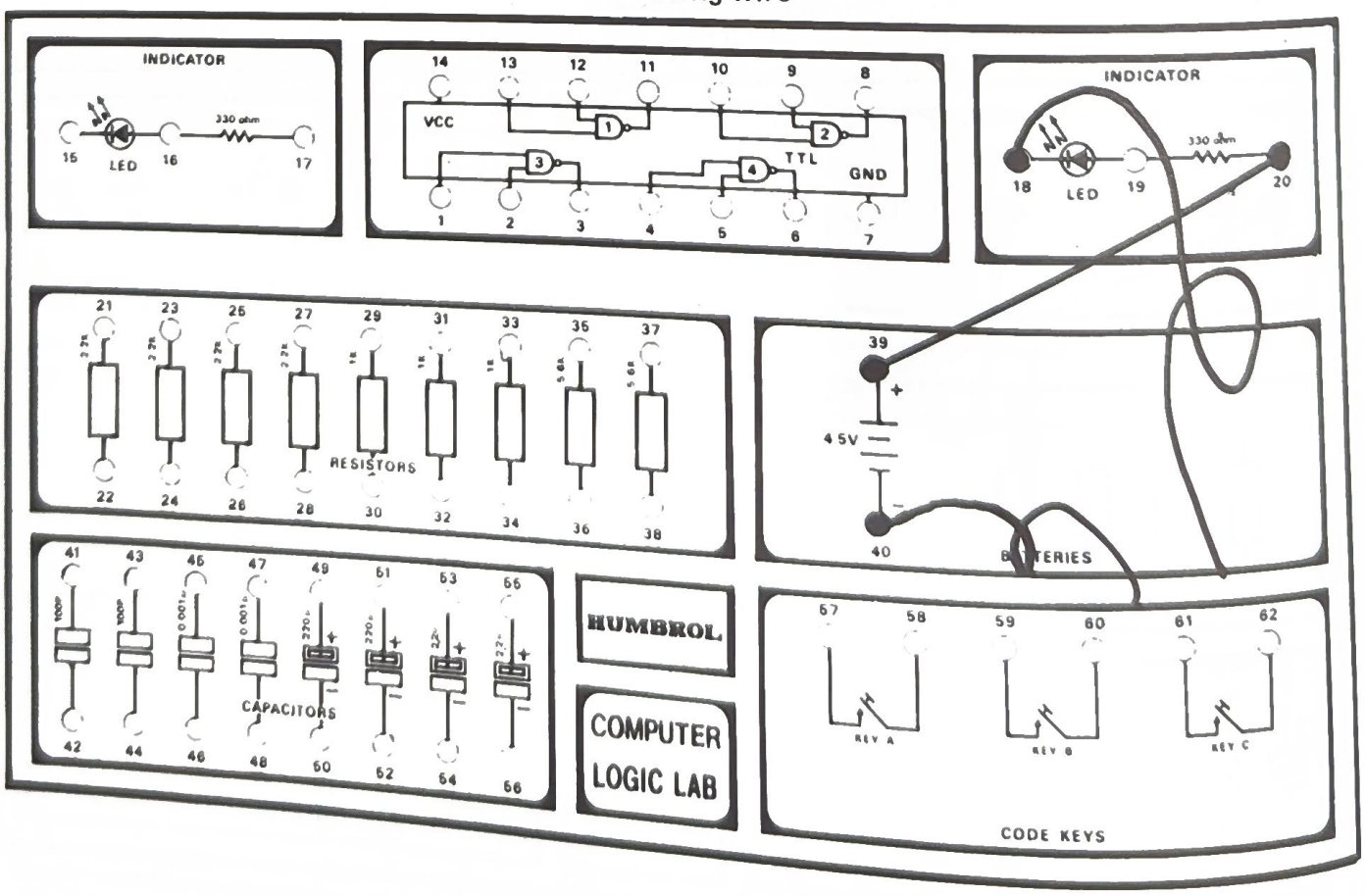

36. WATER QUALITY INDICATOR

With the previous principle — water mixed with some substances passes electricity — .We can make a water quality indicator as above.
Arrange the wires carefully. Insert the wires (which are substituted for probes) into the pure water. Does the lamp flash? Add some sugar to the water, What happens? Add some salt to the water. What happens? Can you find some differences in electrical conductivity between tap water, sugar water and salt water?

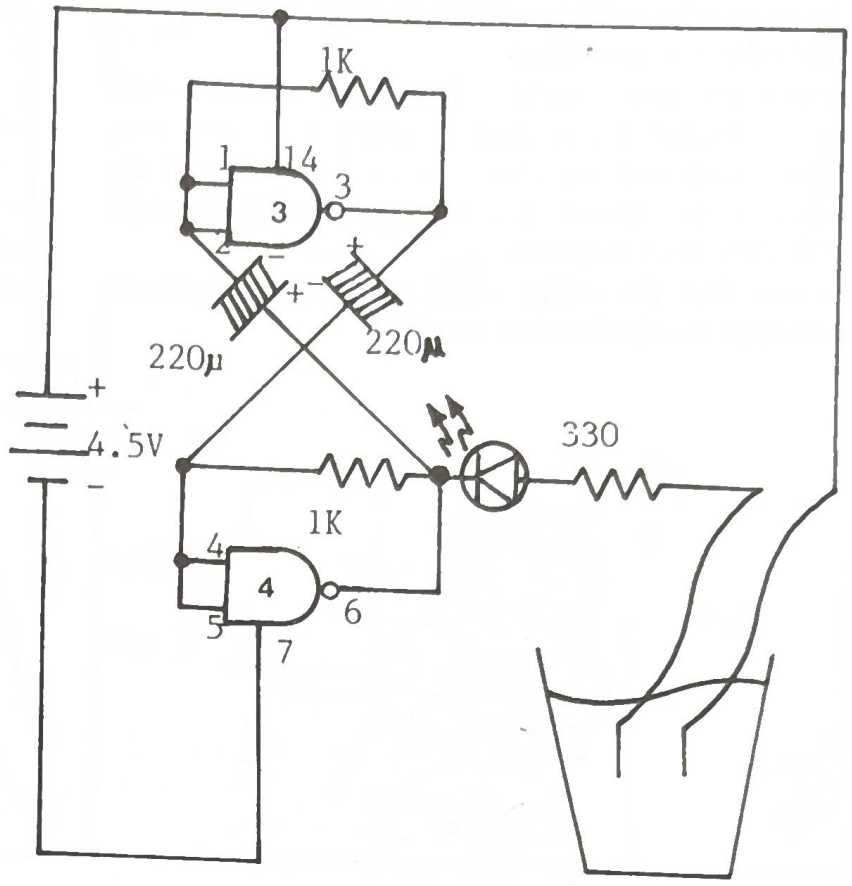

Tap water,
suger water,
or salt water.

Wire Sequence
1–2–29–50
3–30–51
4–5–31–52
6–18–32–49
7–40
14–39 → Long wire
20 → Long wire

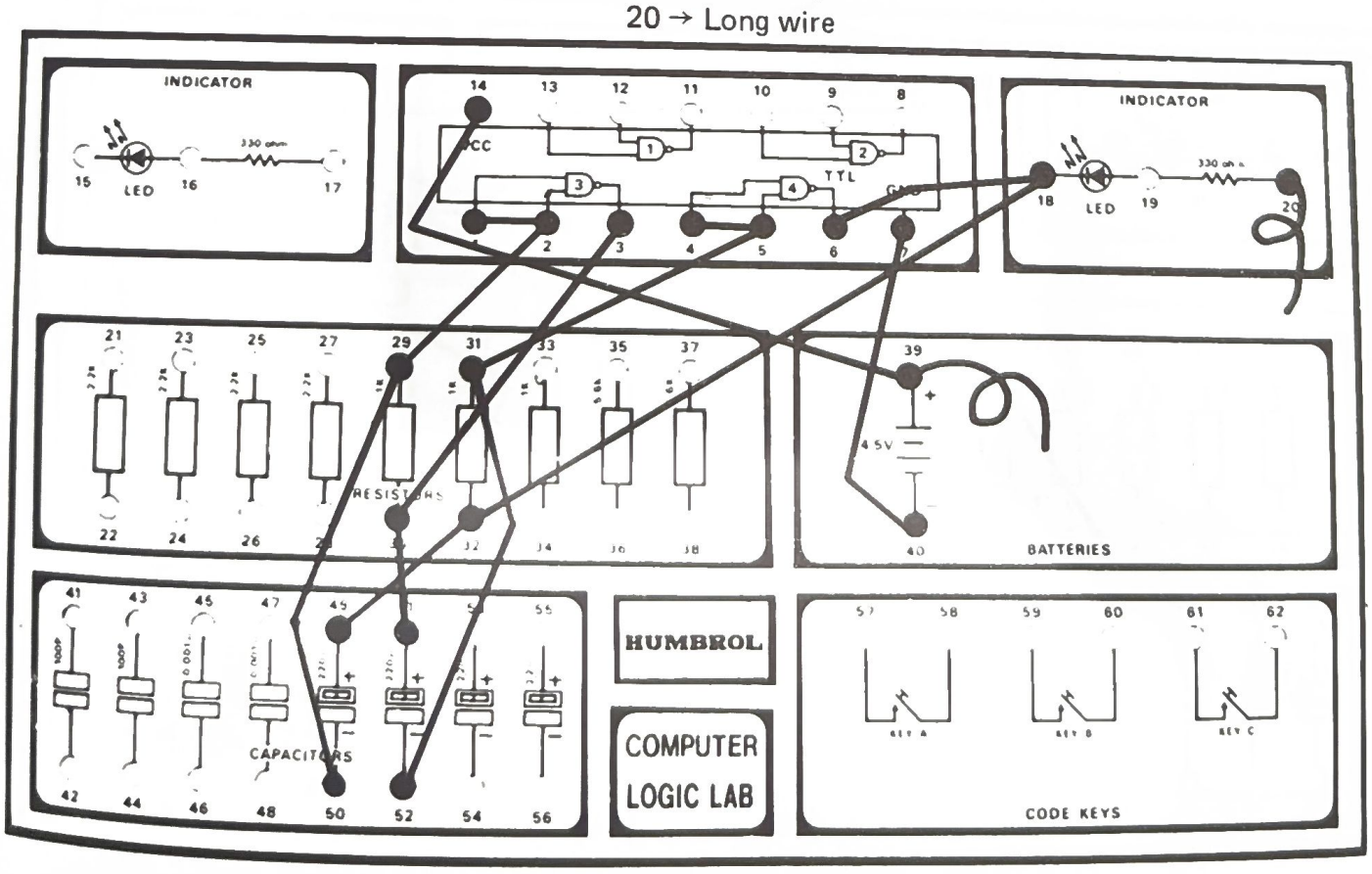

37. CONTINUITY TESTER

The continuity tester is a device to check for any broken wire in electric apparatus.
Arrange the wires carefully. Use the two wires (which are substituted for probes) to check a pressing iron, electric bulb and the like. The LED will flash if the circuit inside is closed. But, this LED will emit no light when the circuit is broken.

Be sure that the device which you are testing is not connected to any electrical source.

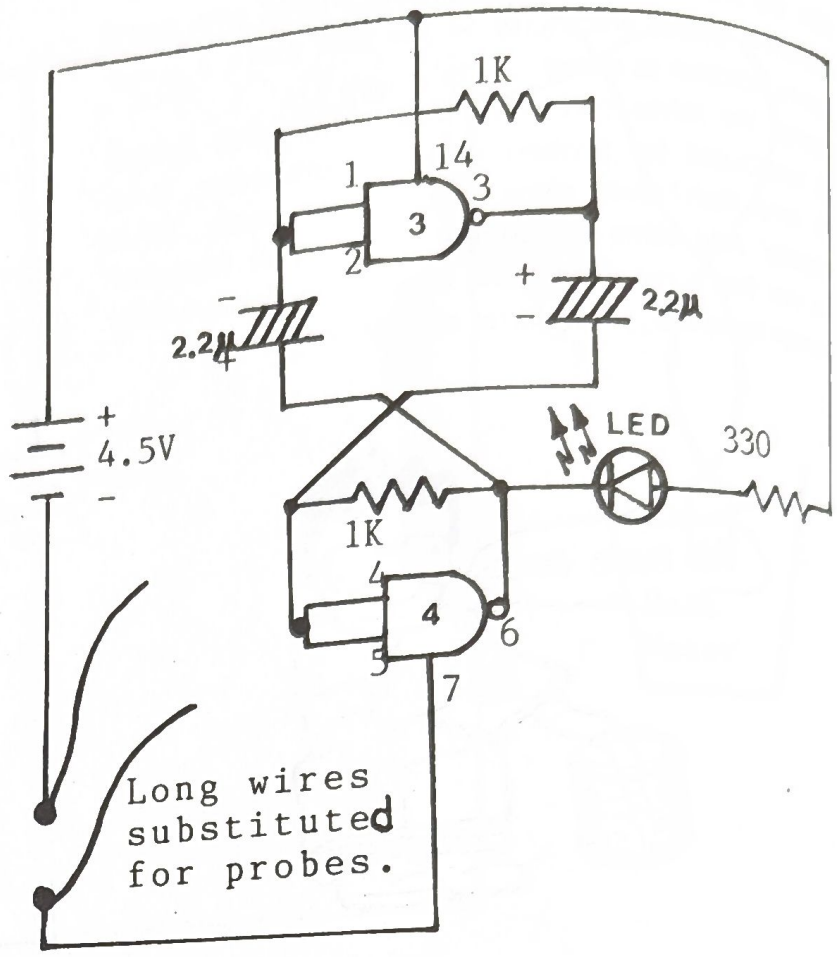

Wire Sequence

1–2–29–50
3–30–51
4–5–31–52
6–18–32–49
14–20–39
7 → Long wire
40 → Long wire

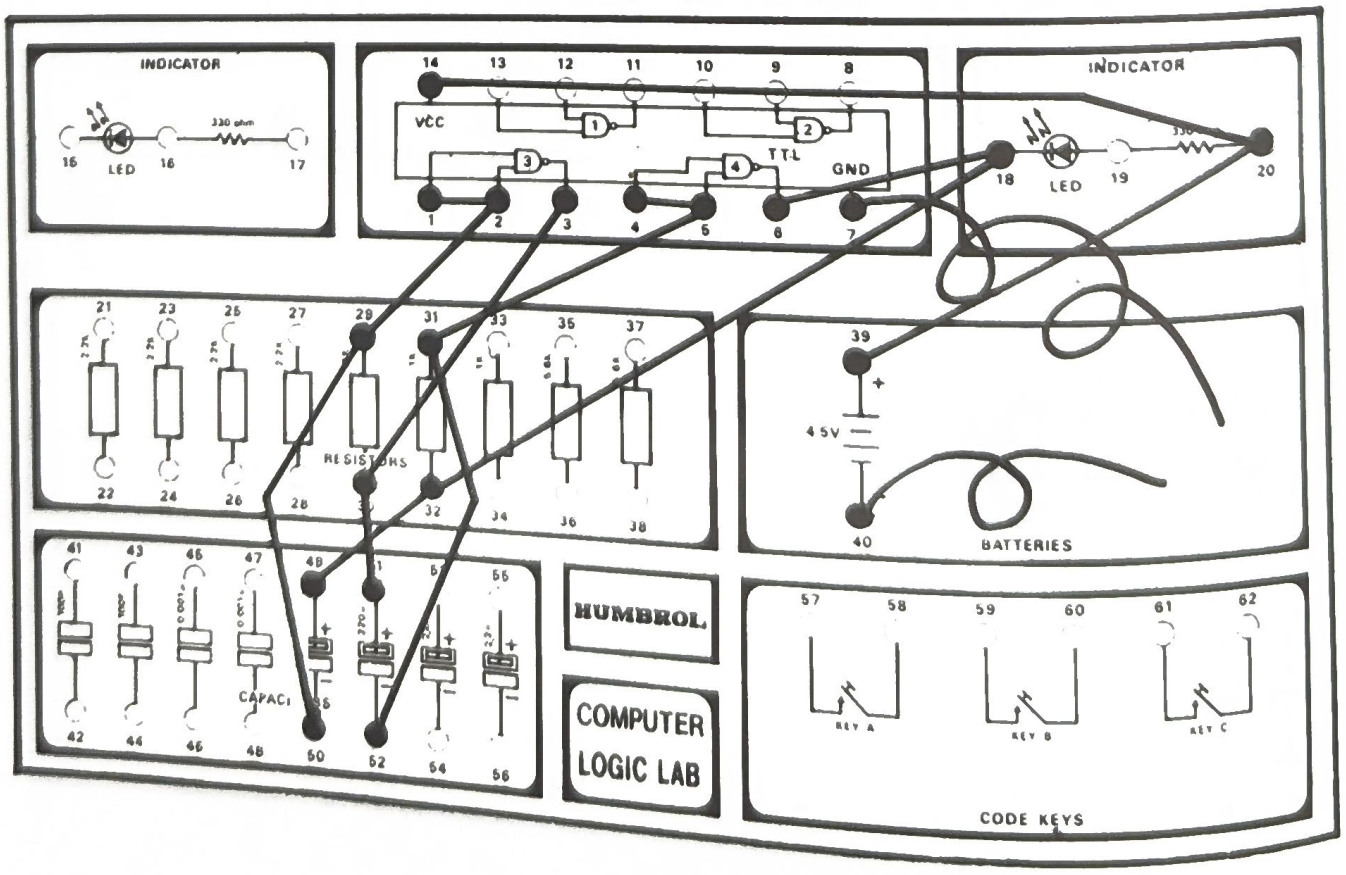

38. POSITIVE PULSE GENERATOR

This positive pulse generator will generate a positive pulse when the TRIGGER key (key A) is pressed. To get another pulse, you have to press the RESET key (key B) and release it, and then press the TRIGGER key. Arrange the wires as illustrated. Press the RESET key, and then press TRIGGER key. The LED will glow for a short time. This is due to the positive pulse at the output of the gate. The duration of pulse is only dependent on the capacitance of the capacitor.

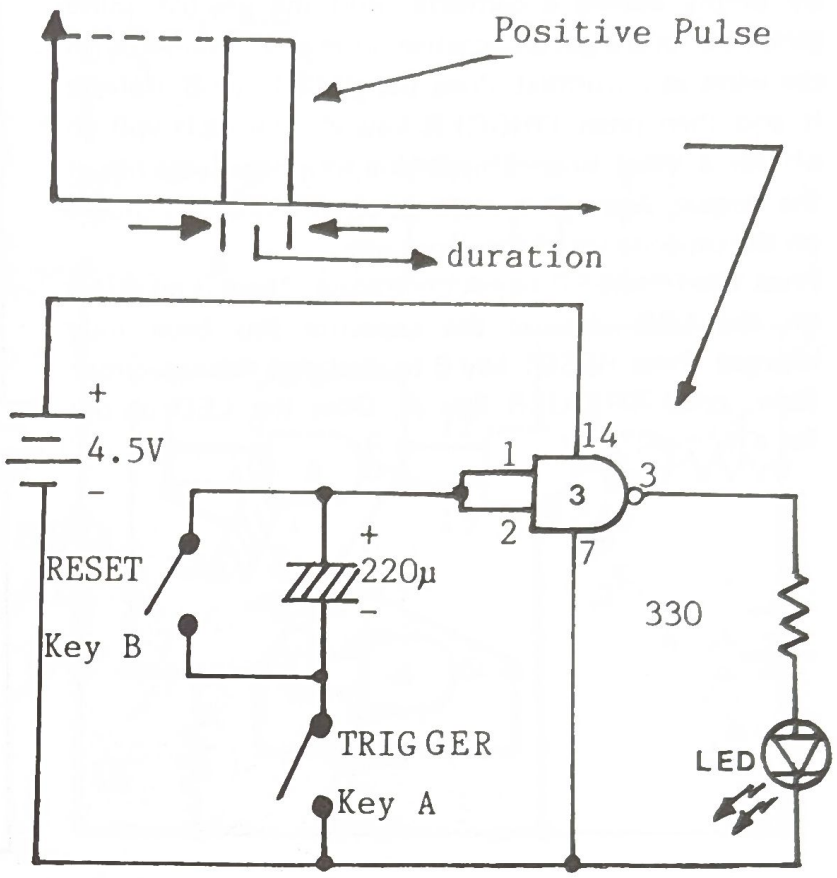

Wire Sequence

1–2–49–59
3–20
7–18–40–58
14–39
50–57–60

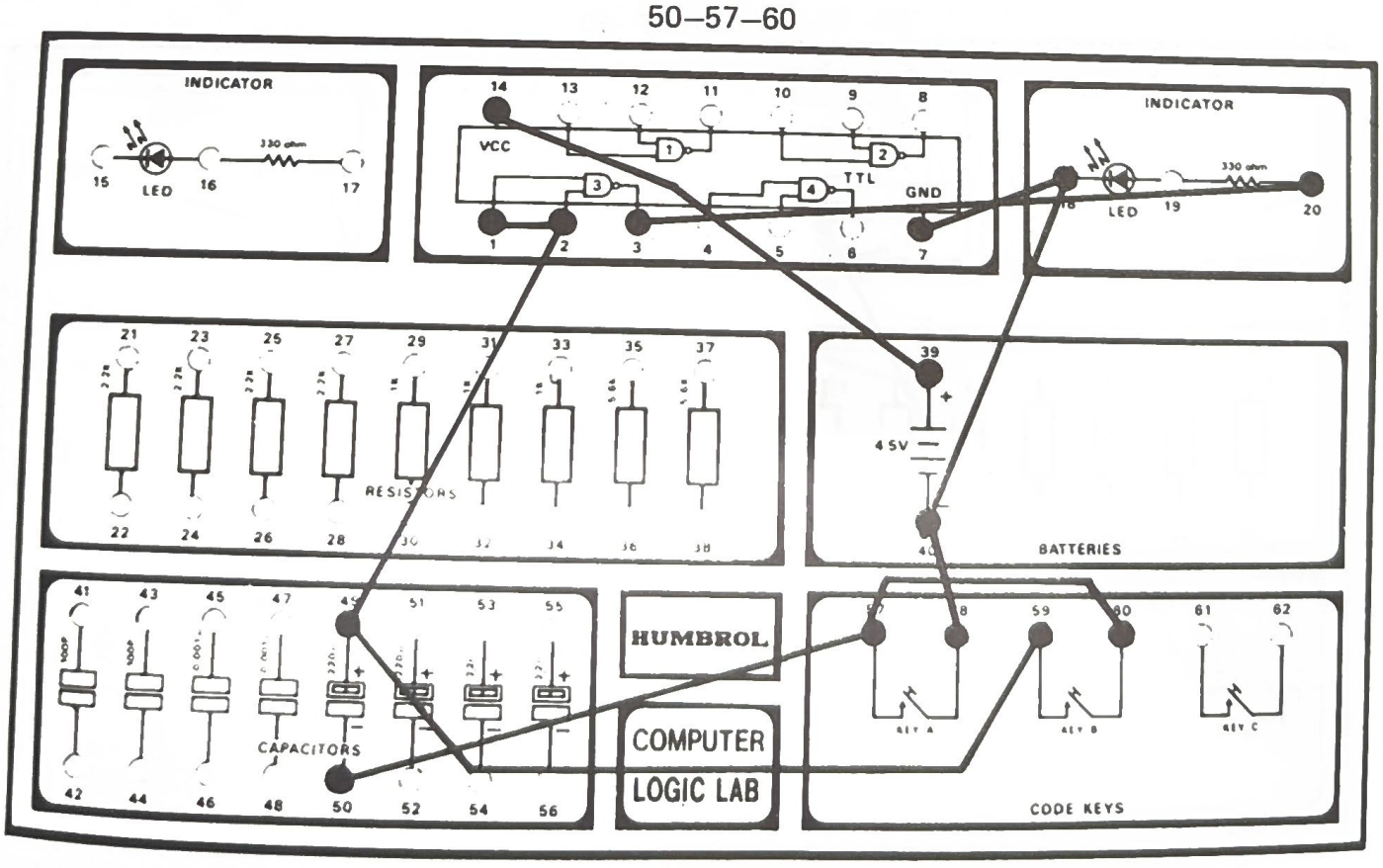

39. NEGATIVE PULSE GENERATOR

By simply adding a converter into the positive pulse generator, you'll get an negative pulse generator. Arrange the wires as illustrated. Press the RESET key B. Release it and then press TRIGGER key A. The LED will go off for a short time. This is due to a negative pulse at the output. Again, the pulse duration is only dependent on the capacitance of the capacitors.

Press the TRIGGER key A once again. There is no effect on the LED because the capacitor has been fully charged. Press RESET key B to discharge the capacitors. Now, press TRIGGER key A. Does the LED go out for a moment?

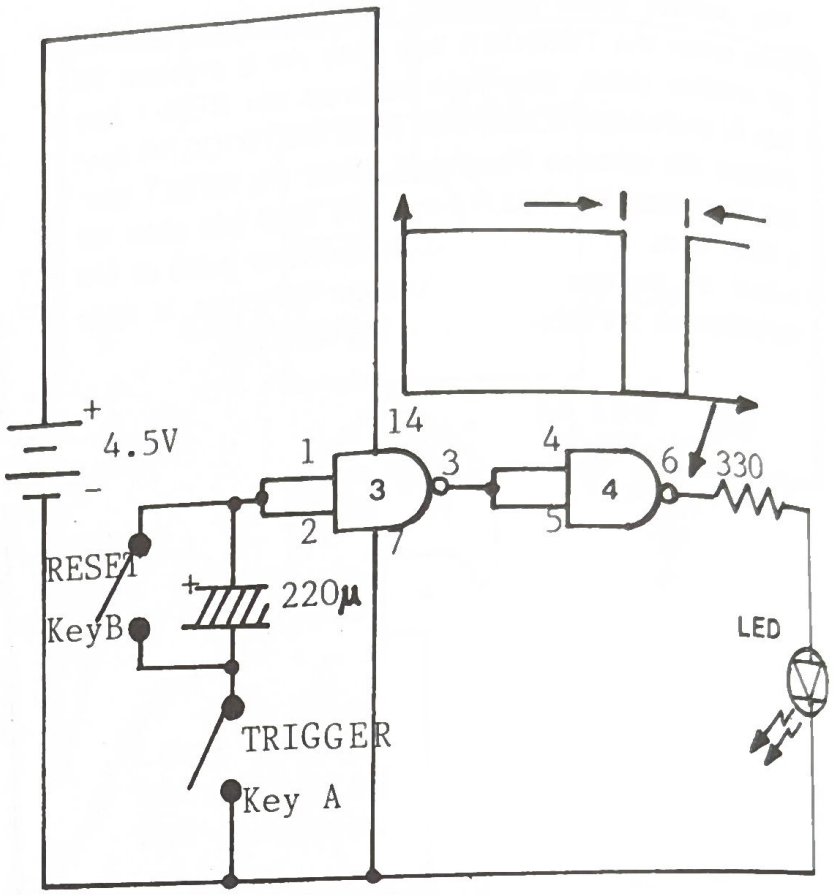

Wire Sequence

1–2–49–59
3–4–5
6–20
7–18–40–58
14–39
50–57–60

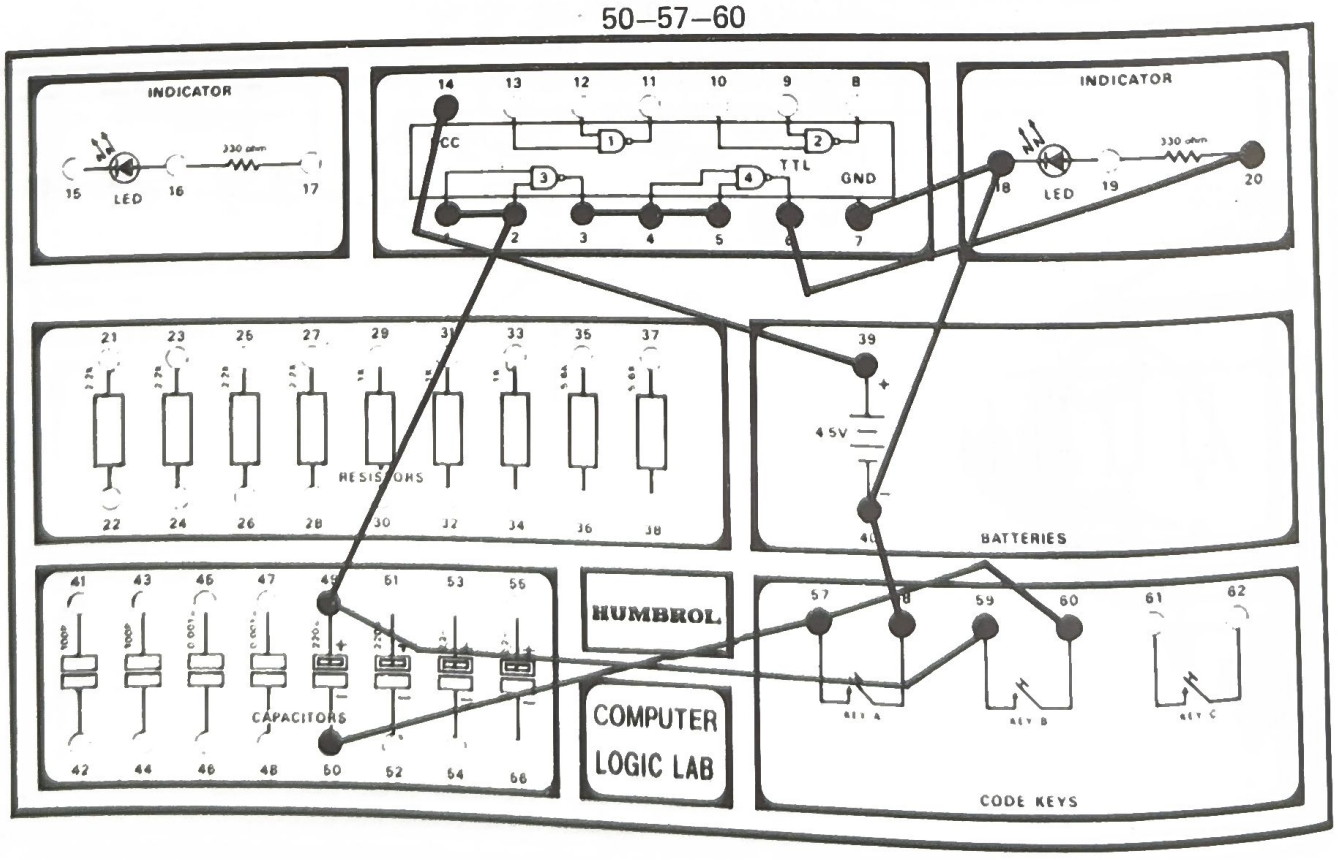

40. PULSE-TRAIN GENERATOR

In the previous two experiments, we learned how to build a pulse generator. Now, by adding a gate-control multivibrator, we can build a pulse-train generator.

Arrange the wires carefully. Press RESET key B and release it. Press TRIGGER key A and hold it. The LED will flash for a duration of time. This is due to the pulse-train of the generator. To get another pulse-train, you have to release the key and then trigger it and hold on.

But, it should be noted, that the frequency of the pulse-train is quite high, making the LED on and off rapidly which could not able be followed by naked eyes. Thus, it seemed that it makes a short flash. In experiment 44, you will learn how to use this "high frequency" to build a BUZZER.

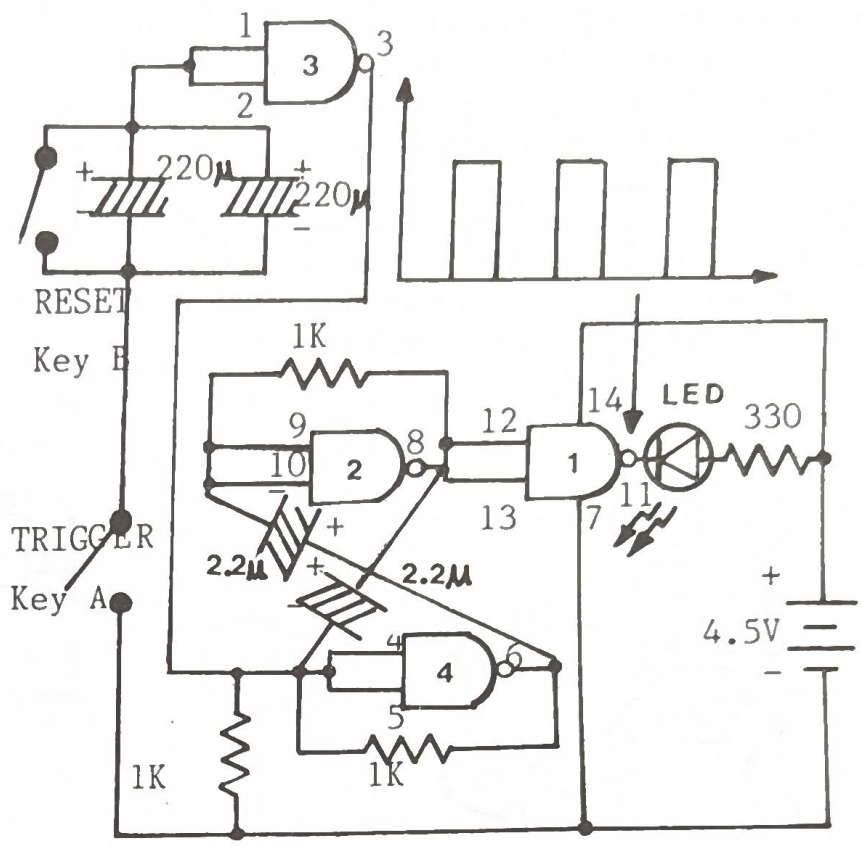

Wire Sequence

1–2–49–51–59
3–4–5–29–31–56
6–32–53
7–30–40–58
8–12–13–34–55
9–10–33–54
11–18
14–39–20
50–52–57–60

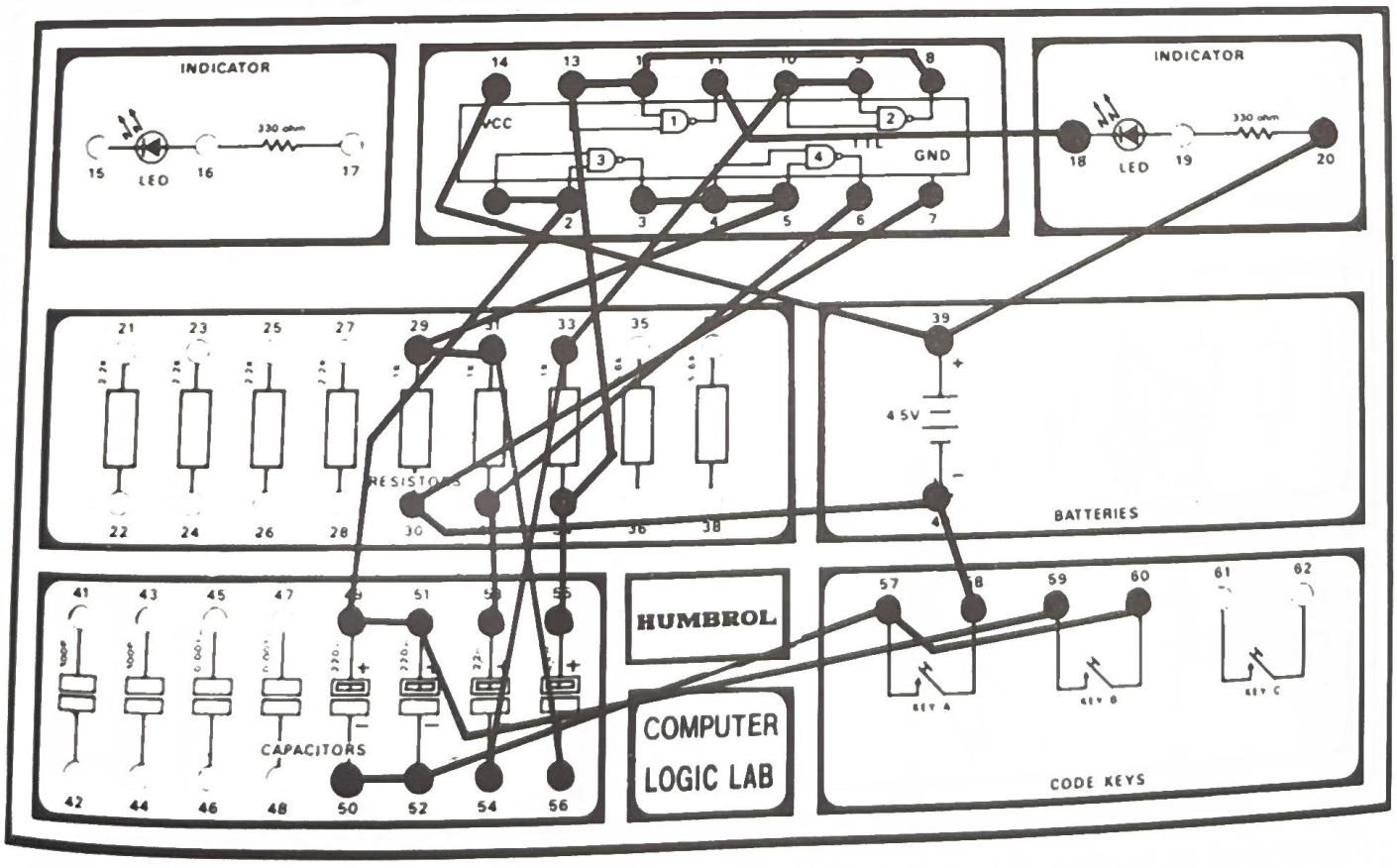

41. DEK-DEK SOUND

This is a very low frequency oscillator. An oscillator, as you have learned, is a circuit that be used to generate an electrical signal. The earphone, in series with a 330 ohm resistance, is connected to the output of the oscillator. The earphone is a device to convert the electrical signal into sound.

Follow the layout diagram and the wire sequence listing and connect the wires carefully. Press key A. Can you hear something? If you have gone truely, you would hear DEK-DEK sound from the earphone.

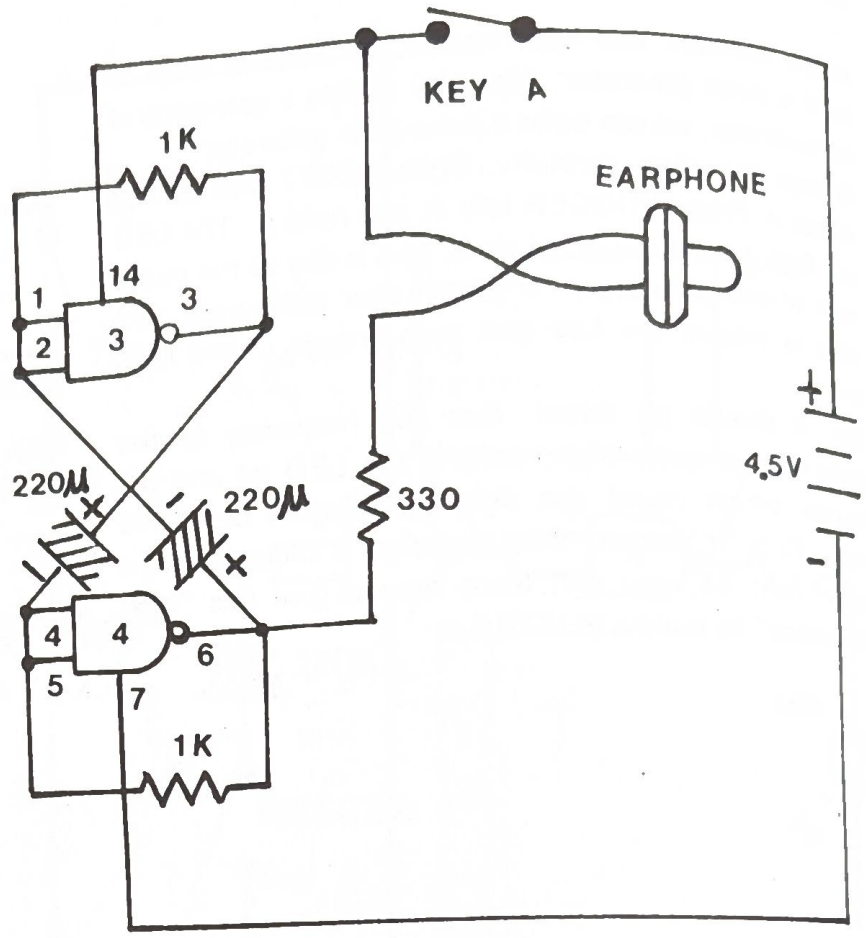

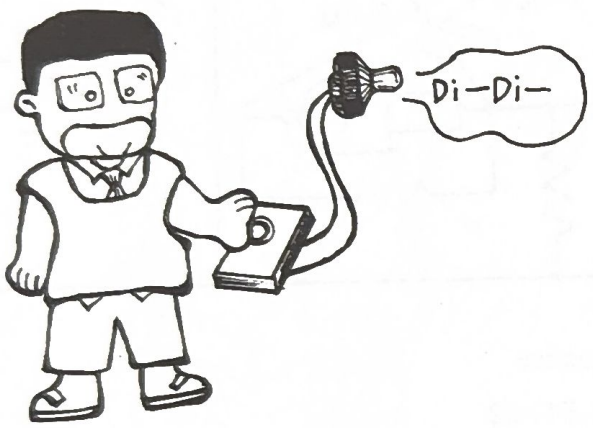

Wire Sequence

3–30–51
4–5–52–31
6–17–49–32
7–40
14–57
29–1–2–50
39–58
16–earphone
14–earphone

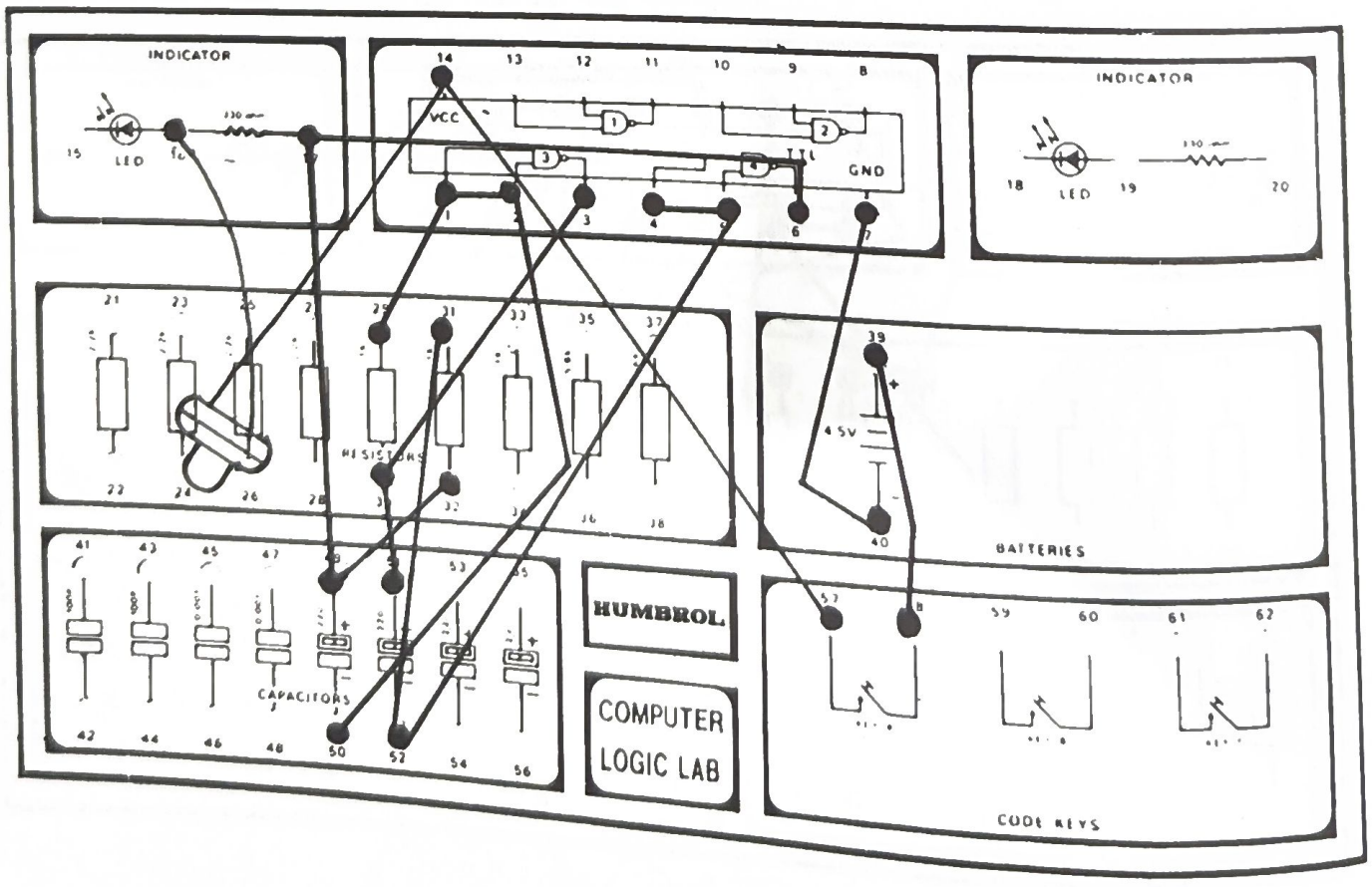

42. DEK – DEK SOUND WITH FLASH LIGHTS

If you look carefully at this circuit, you will find that it is a combination of the experiment 20 (the Free-Running Multivibrator) and the experiment 41. The gate No. 2 is used as an non-inverting buffer, to provide the necessary separation between the LED and the earphone. You learned about the "Buffer" in experiment 4.

Follow the wire-sequence carefully. Press key A and hold it. You will find that one of the LEDs will come on and the earphone will make a dek sound. After remaining on for a while, the first LED will turn off as the other one comes on, and the earphone will give another dek sound.

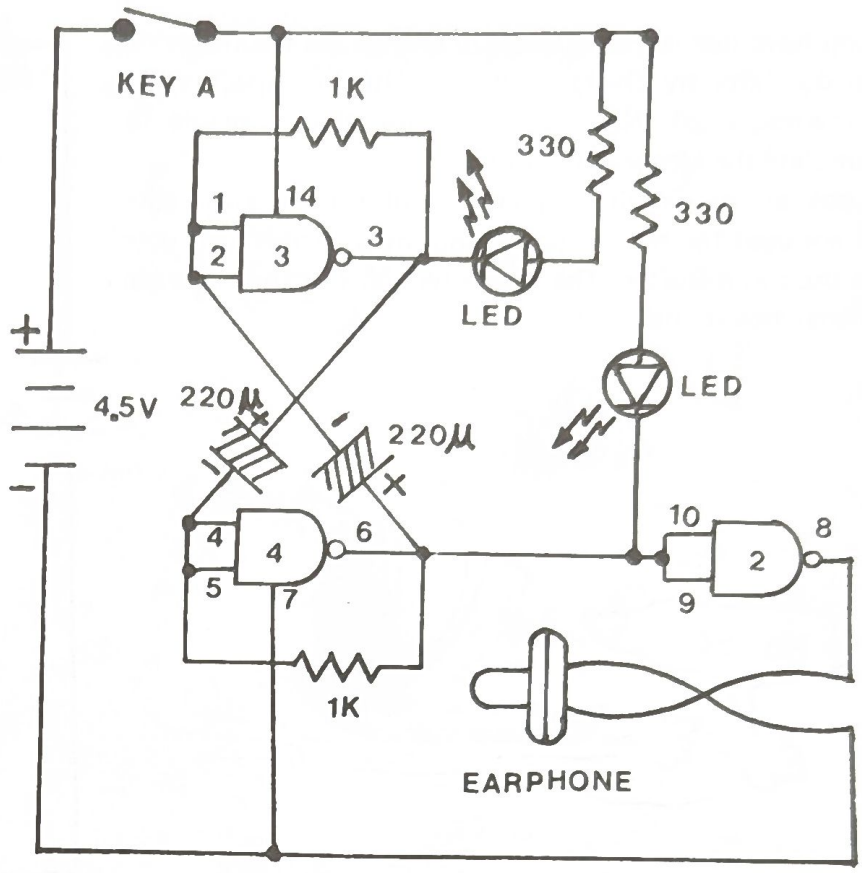

Wire Sequence
1–2–32–52
3–15–31–49
4–5–34–50
7–40
10–9–6–18–33–51
14–17–58–20
39–57
8– earphone
4 0 –earphone

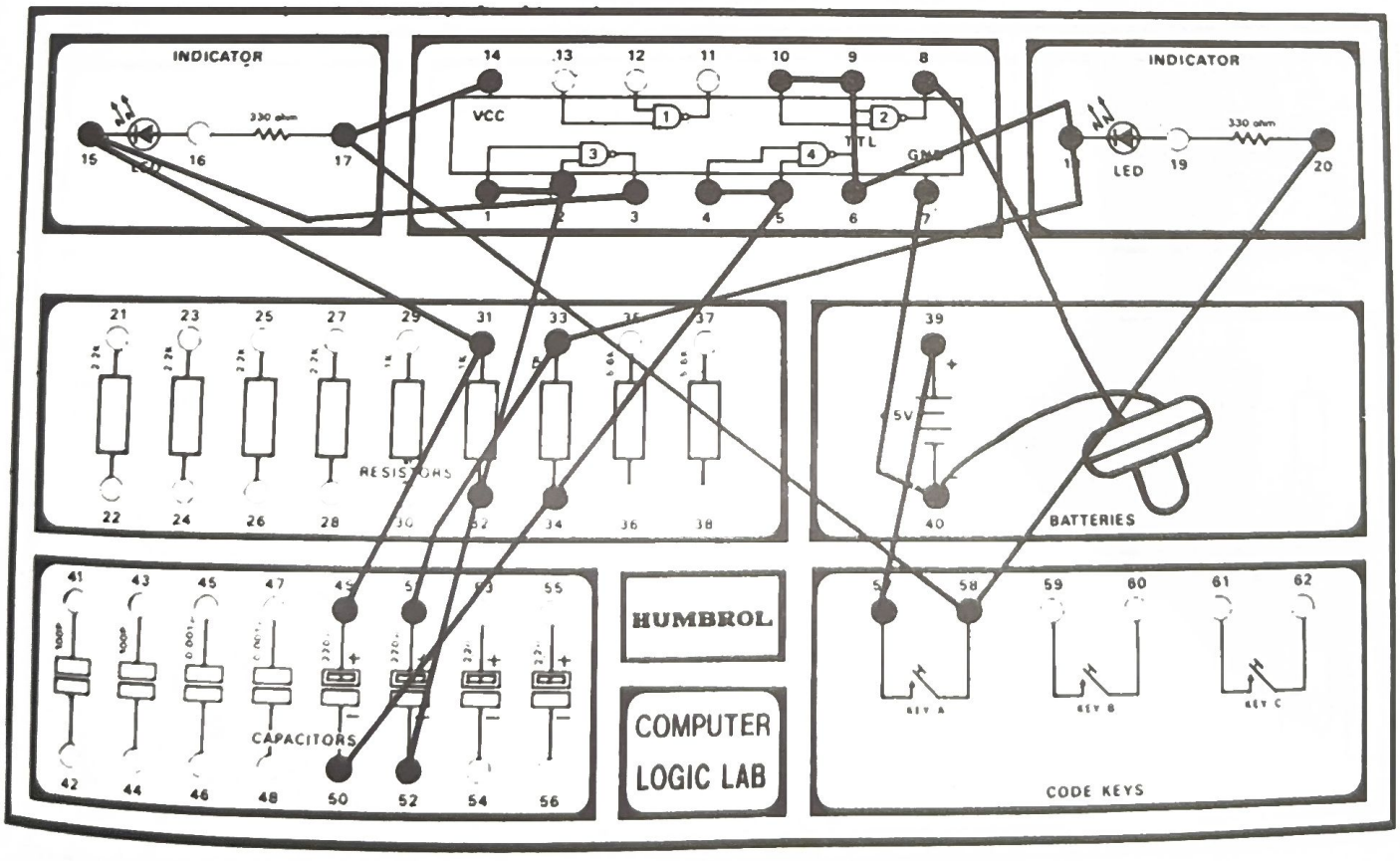

43. MOTOR BOAT SIMULATOR

You have learned about how to change the frequency of an oscillator by changing the capacitor or capacitors in experiment 20. Now, you will use that principle to simulate the Motor-Boat sound.

Look at the circuit diagram carefully. Gate 3 and gate 4 are used for the oscillator, and the second NAND gate is used as a Buffer. The earphone converts the electrical signal into sound.

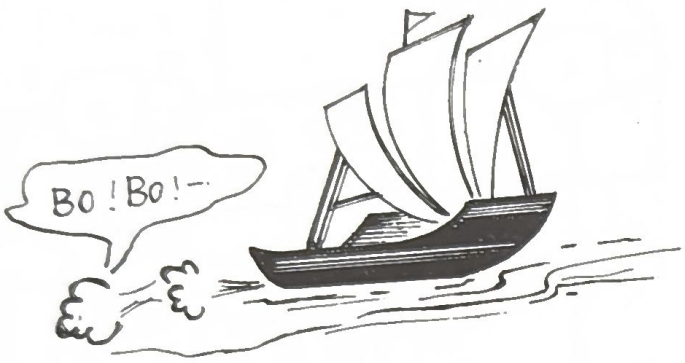

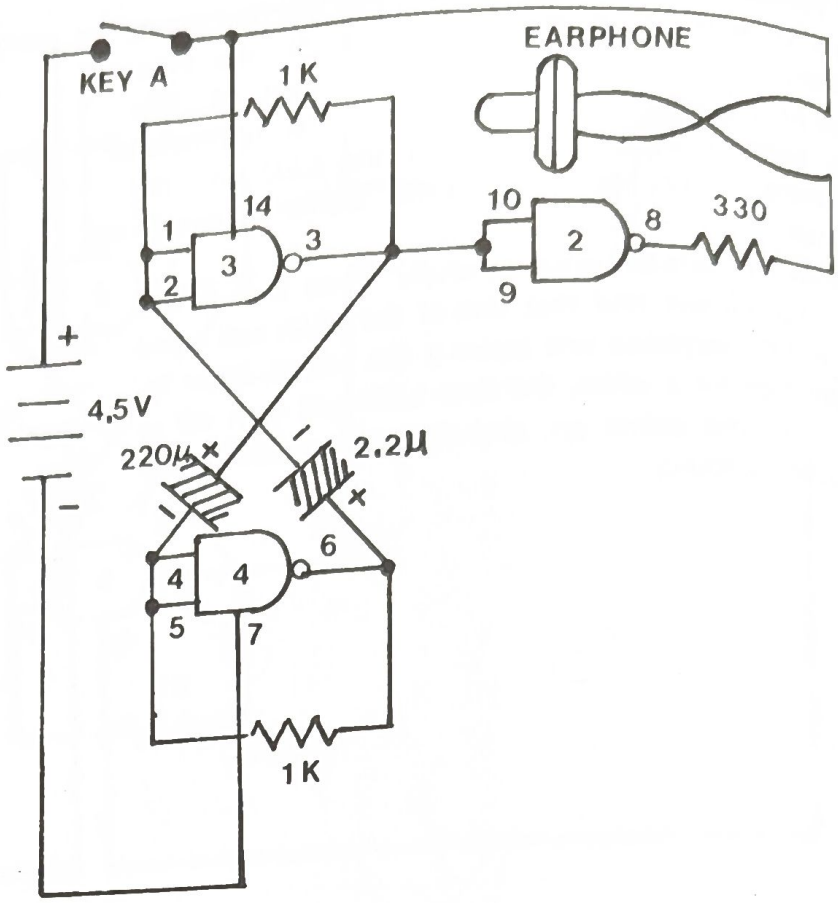

Wire Sequence
1–2–32–54
4–5–30–50
6–29–53
7–40
8–19
10–9–3–31–49
14–58
39–57
20– earphone
58– earphone

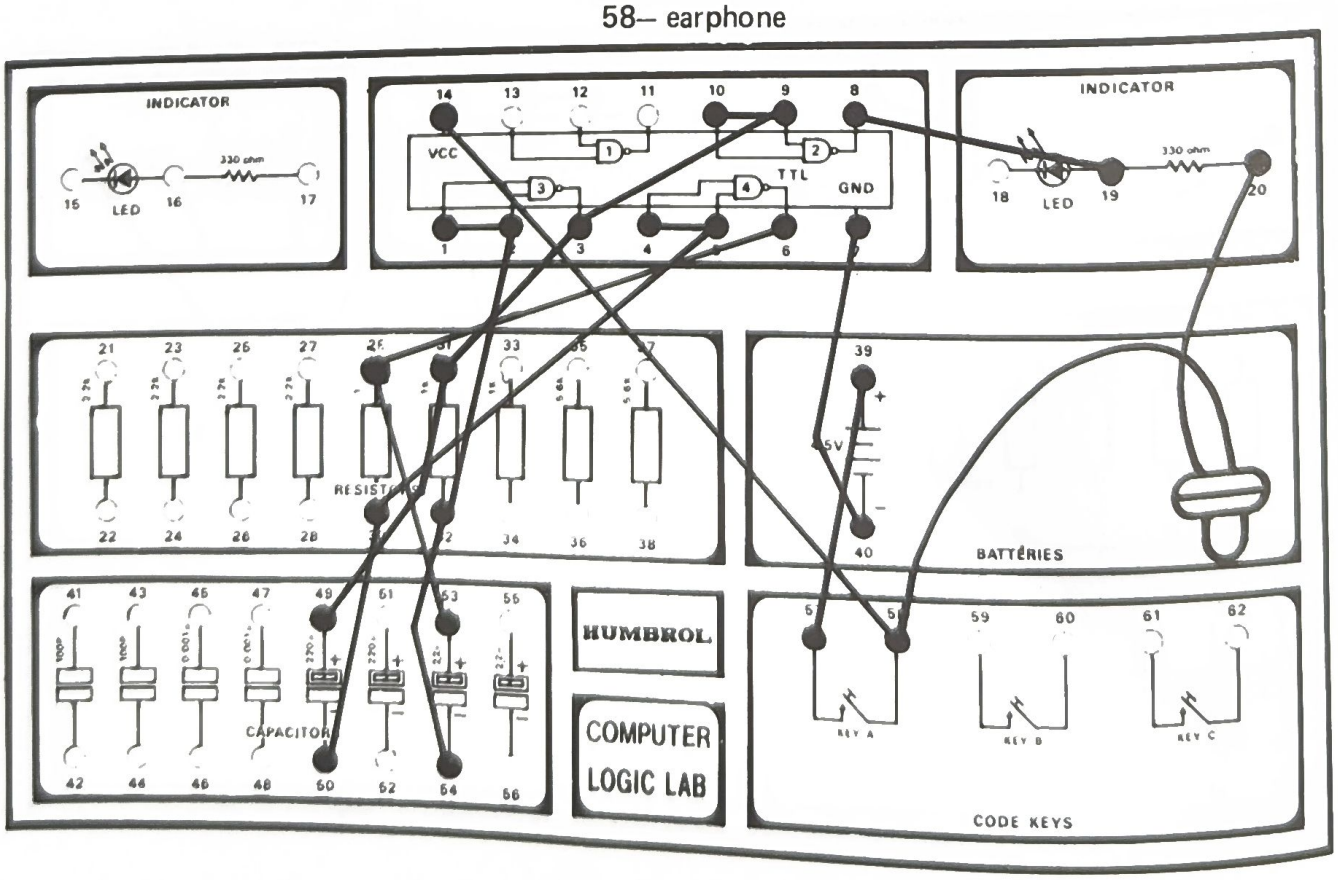

44. BUZZER

This is also an application of oscillatory circuit. In this circuit, we use two 2.2μ capacitors instead of a 220μ and a 2.2μ as in the Motor-Boat Simulator, or two 220μ capacitors as in the Dek-Dek Sound experiment. The capacitance is much lower now, so the frequency of the sound will be higher.

Arrange the wires carefully, as illustrated. Press key A and the Buzzer will sound.

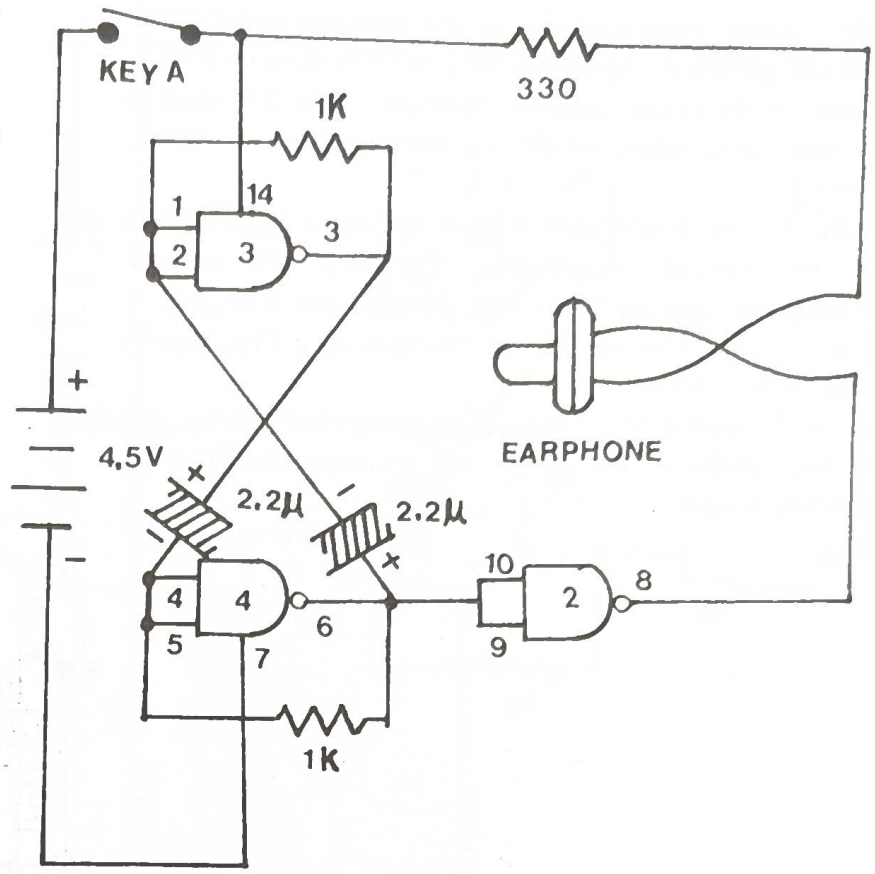

Wire Sequence

1–2–32–56
4–5–30–54
6–29–55
7–40
10–9–3–31–53
14–58–19
39–57
8– earphone
20– earphone

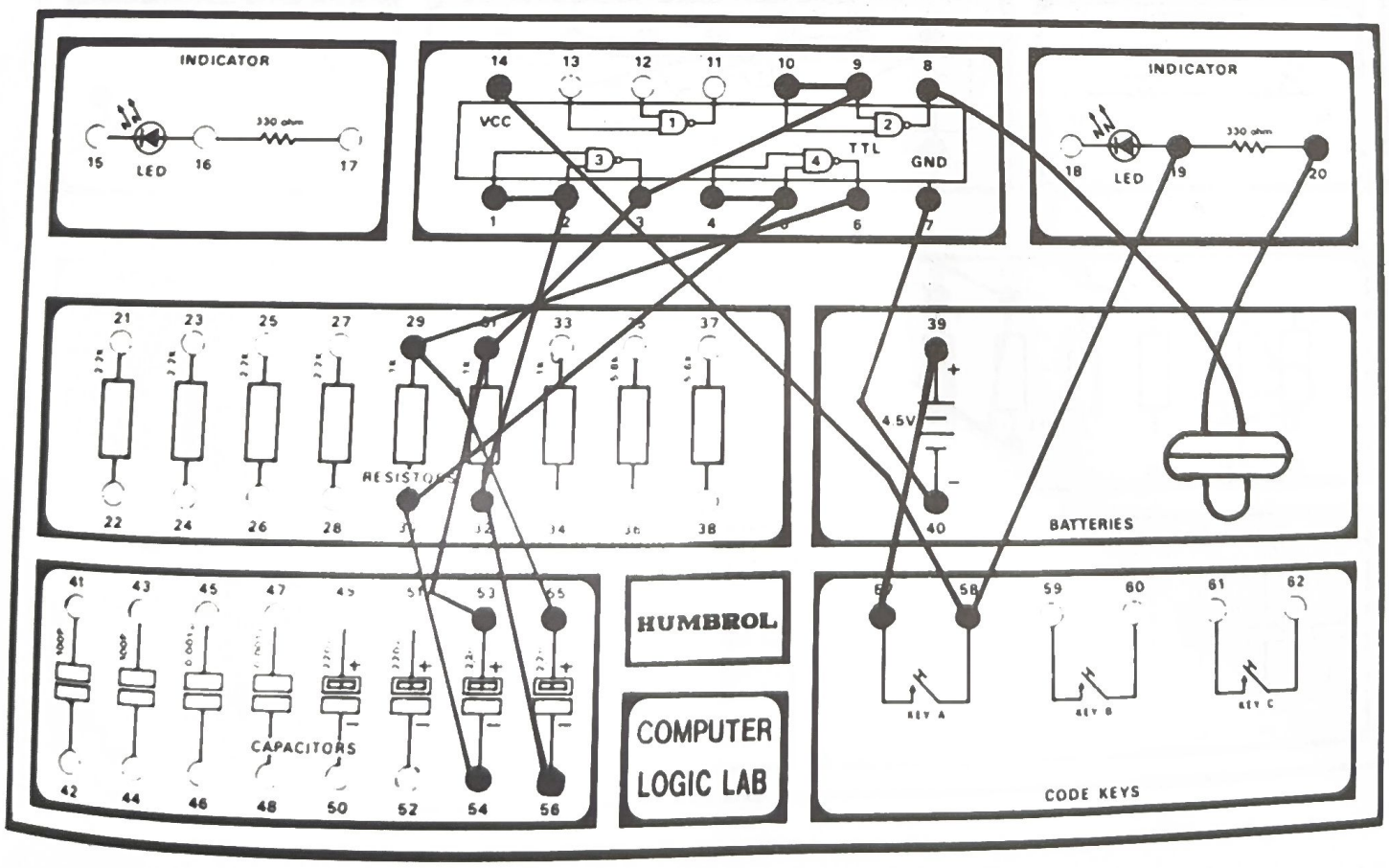

45. BUZZER SOUNDING FOR A DEFINITE TIME

With minor modifications to the previous experiment, we will get a buzzing sound for a definite time interval. Look at the circuit diagram carefully. Gate 2 is used as an electronic relay, which you learned about in experiment 27.

Gate 1, gate 3 and gate 4 have the same functions as in the previous experiments. The only difference is: this Buzzer can be controlled through pin 5 of gate 4. You learned how to control the gate of a Flip-Flop in experiment 22.

After following the wire-sequence carefully, press key A and release it, the buzzer will continue sounding for a definite time.

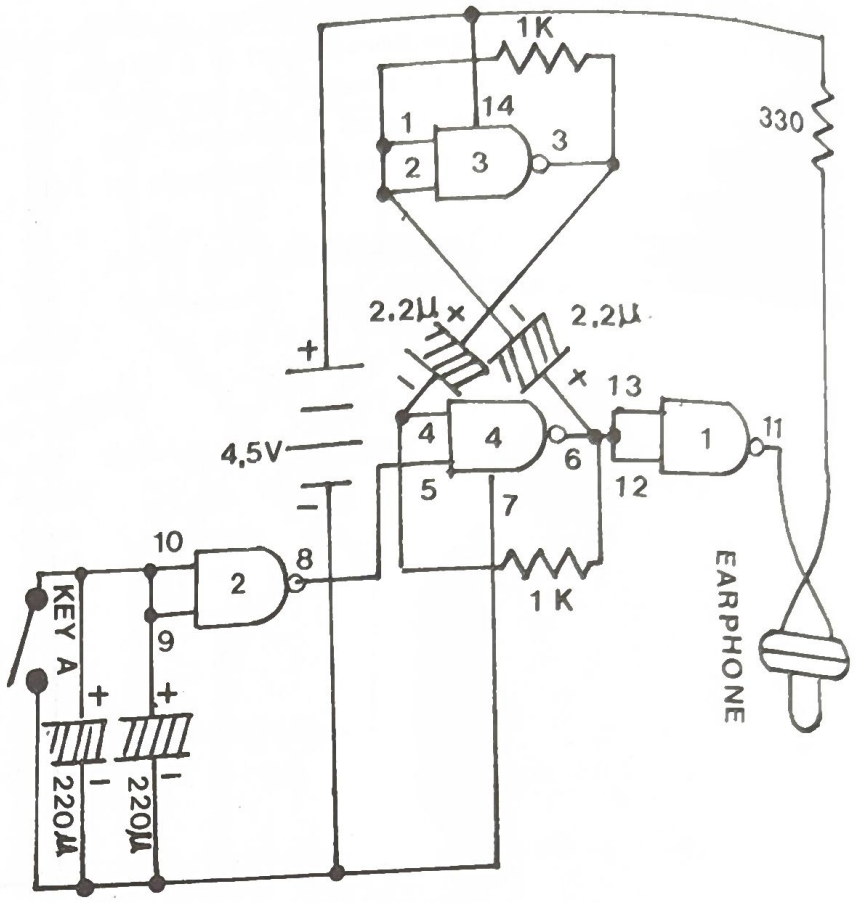

Wire Sequence

1–2–32–56
3–31–53
4–29–54
5–8
7–40–57–52–50
9–10–58–51–49
13–12–6–30–55
14–39–19
11– earphone
20– earphone

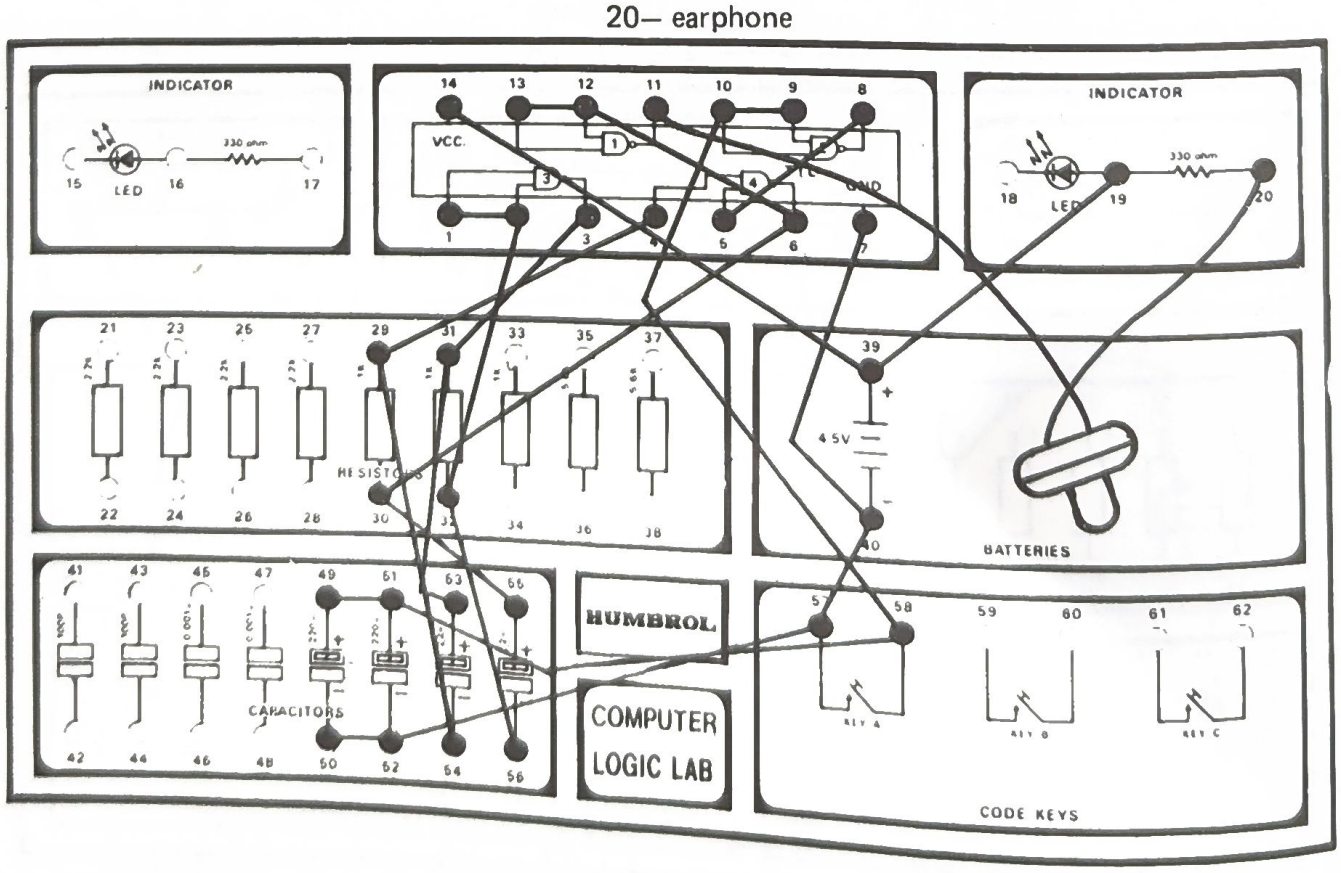

46. SOUND-INDICATING TIMER

You learned the basic principle of a timer in experiment 26, in which the timer indicator was an LED.

Now, you are going to study the Sound-Indicating Timer. Look at the circuit diagram carefully. It is just a little different from the previous one. Can you find the difference?

Gates No. 2 and No. 4 are combined to be a control-gate oscillator. Gates No. 1 and No. 3 are used as buffers. As soon as you press key A, the two capacitors are charged. The voltage at the input of gate No. 3 raises to 4.5V. The output of gate No. 3 will be low, the oscillator is disabled, the earphone gives no sound. After releasing key A, the two capacitors discharge through the 1 K resistor. When the voltage at the input of gate No. 3 is low enough, its output will be high, the oscillate is enabled, and the earphone gives sound.

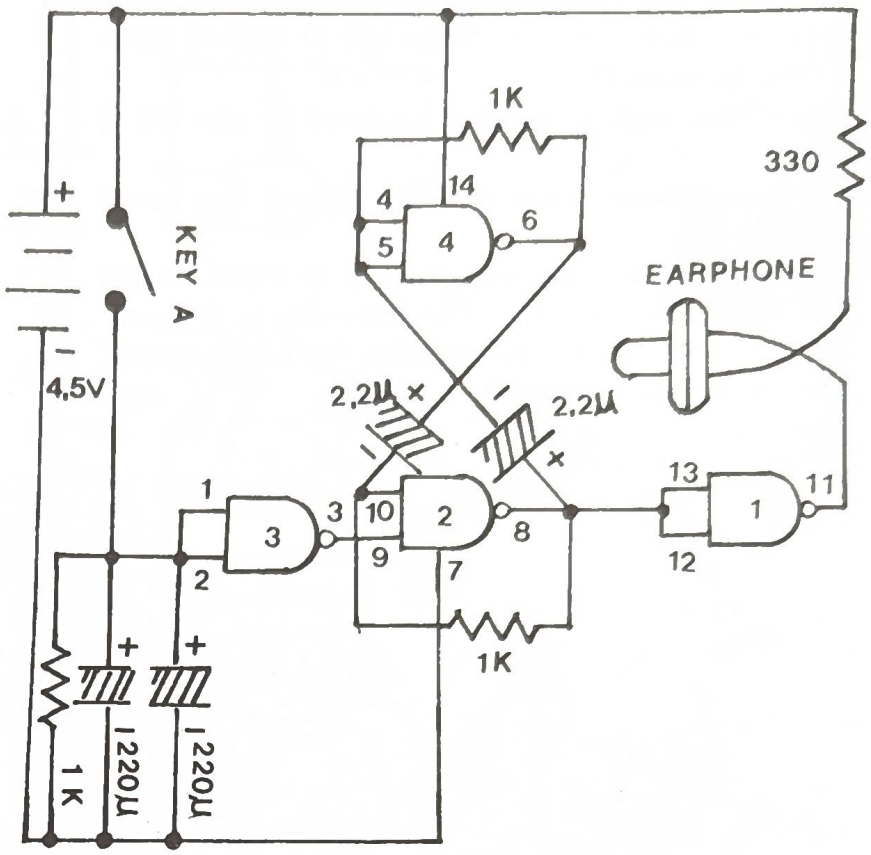

Wire Sequence

1–2–33–49–51–57
3–9
4–5–29–56
6–30–53
7–40–34–52–50
8–12–13–32–55
10–31–54
14–39–58–19
11– earphone
20– earphone

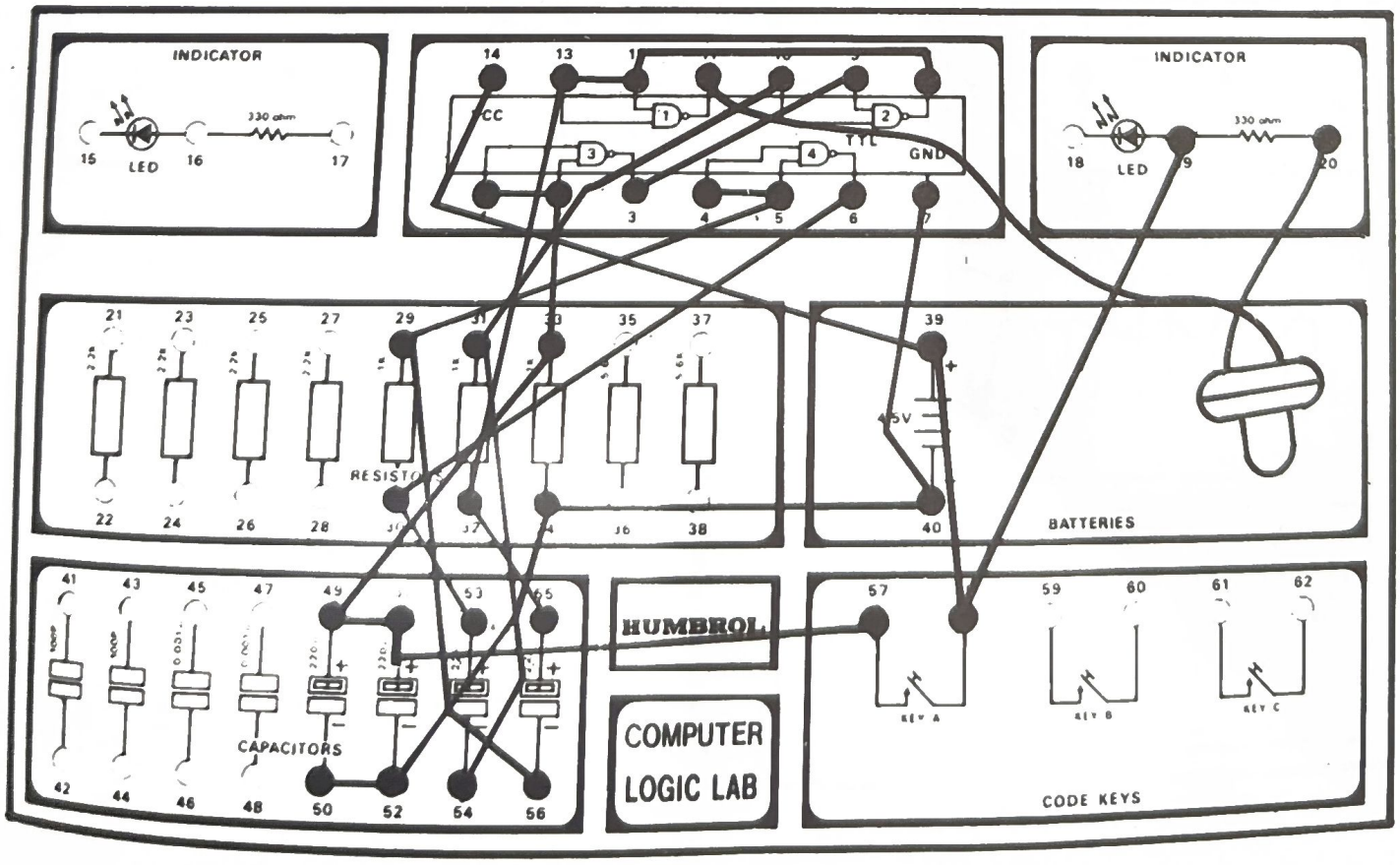

47. ELECTRONIC FISH LURE

Fish have a very keen sense of hearing, and immediately congregate when hearing the sounds of feeding (even at long distances).
This simple feeding sound is produced by gate No. 3 and an earphone.
Put the earphone in a water-proof bag and then put in water.
You may put a stone into the bag to make the bag sink easily into the water. The frequency of the tone, and thus the type of fish attached, can be changed by pressing the key A or key B.
Have fun!

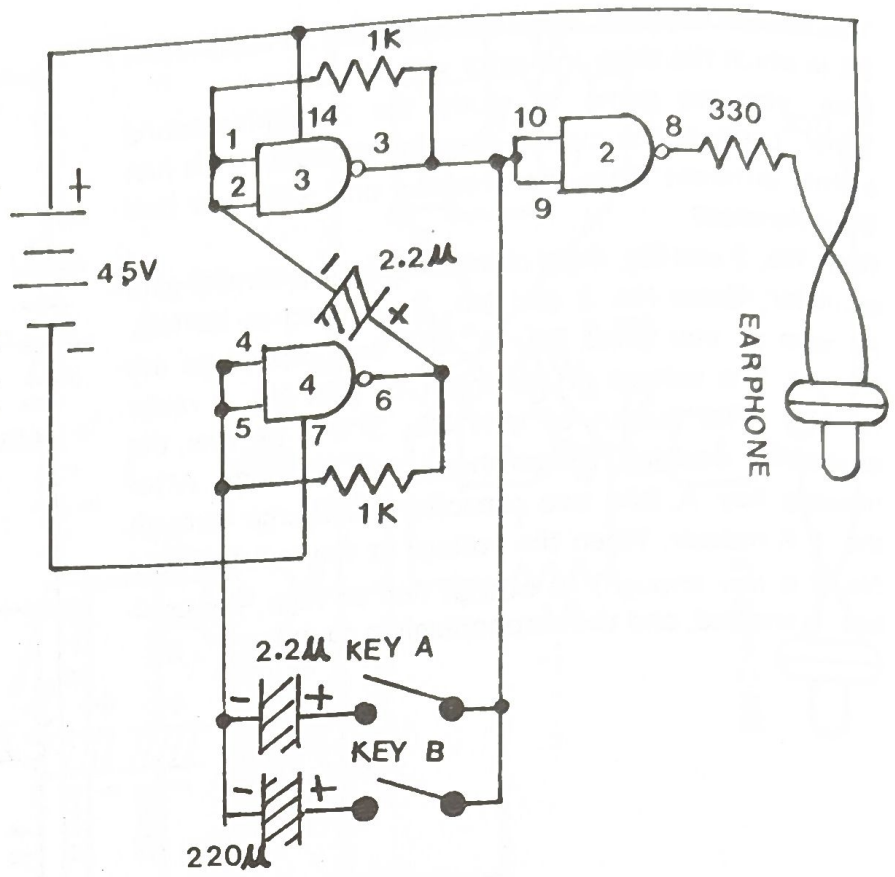

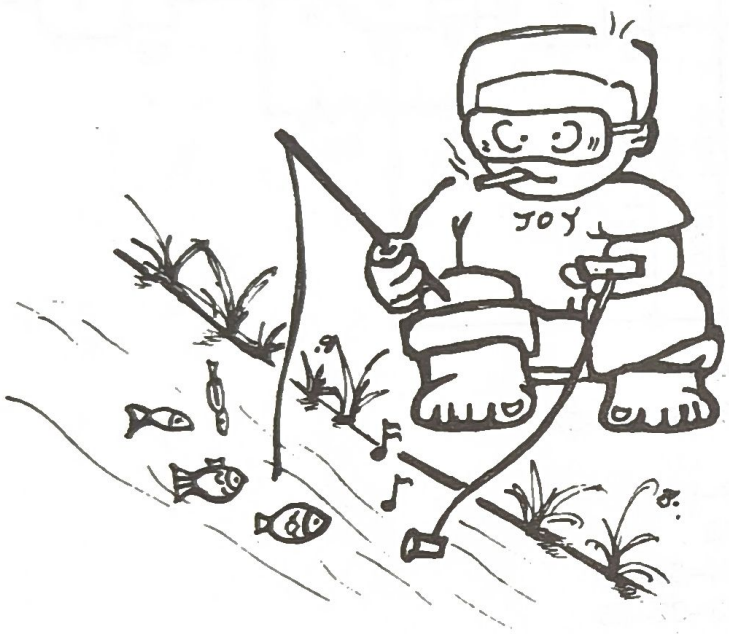

Wire Sequence

1–2–32–56
3–9–10–31–58–60
4–5–29–54–52
6–30–55
7–40
8–16
14–39
51–59
53–57
14– earphone
17– earphone

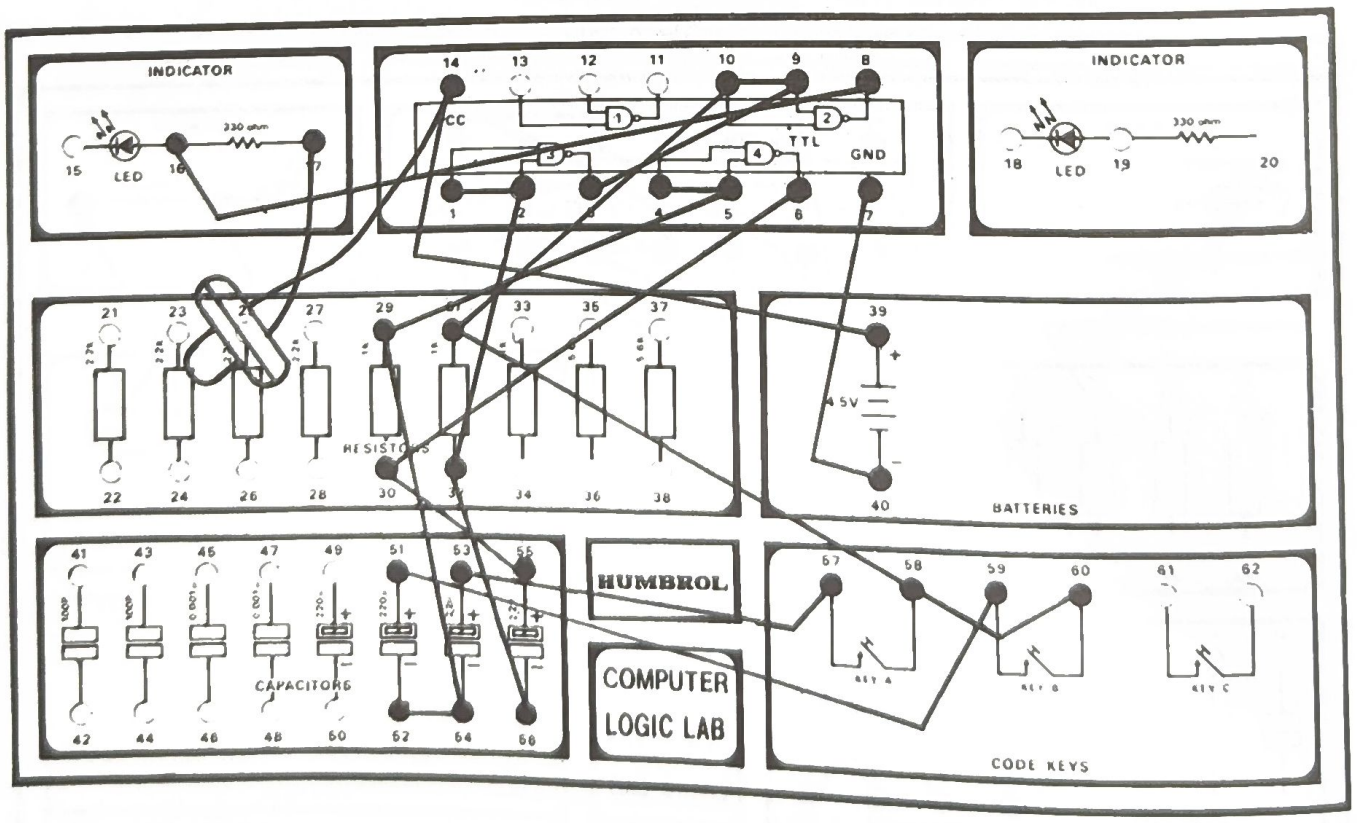

48. CONDUCTIVITY TESTER

You learned in experiment 35 that pure water (distilled water which contains no salts or organic components) does not conduct electricity, but will conduct electricity if even a small amount of salt or organic material is added.

In this experiment, the water to be checked is connected between the output of gate No. 2 and the earphone.

The louder the sound from the earphone, the higher the conductivity of the liquid being tested.

Add sugar, sait, or other organic components to water to see the differences.

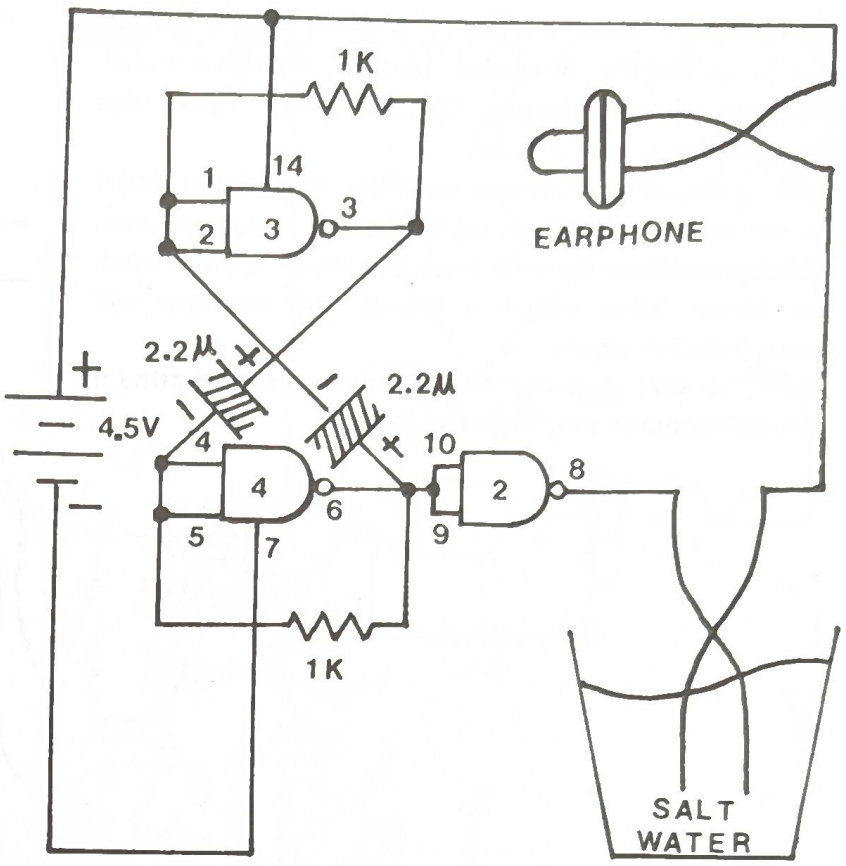

Wire Sequence
1–2–32–56
3–31–53
4–5–30–54
6–9–10–29–55
7–40
14–39
39– earphone
57– earphone
8– long wire
57– long wire

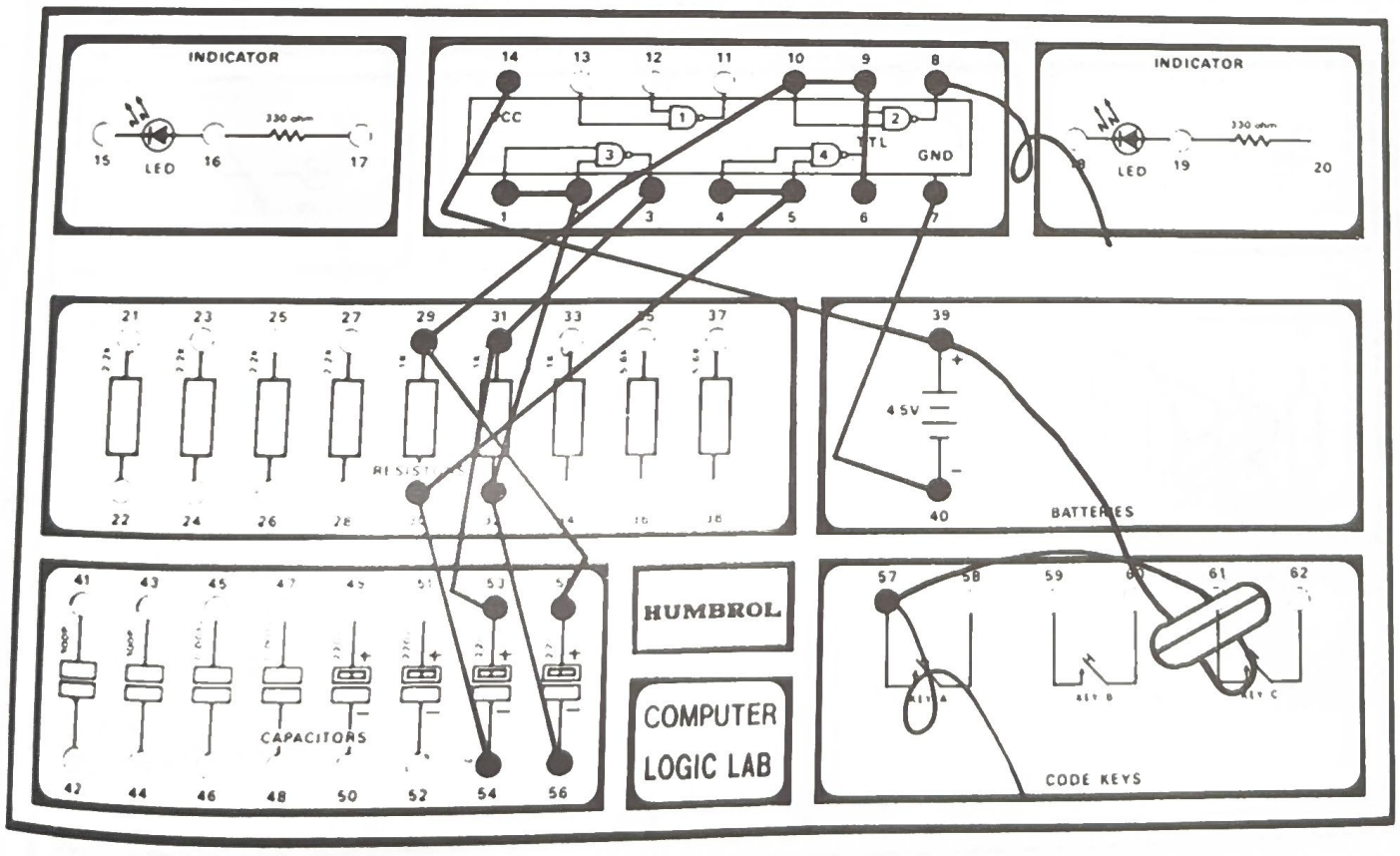

49. CONTINUITY TESTER FOR BLIND

The continuity tester is a device to check for any broken wire in an electric apparatus. Usually, we use a meter, lamp, etc. for such testing. This Continuity Tester uses the earphone as an indicator.

Look at the circuit diagram carefully. Gate 3 and gate 4 are connected as a simple oscillator. But at normal state, the oscillator was isolated from the power source. When the circuit being tested is closed, the earphone will give a Dek-Dek sound.

Again, be sure that the device which you are testing is not connected to any electrical source.

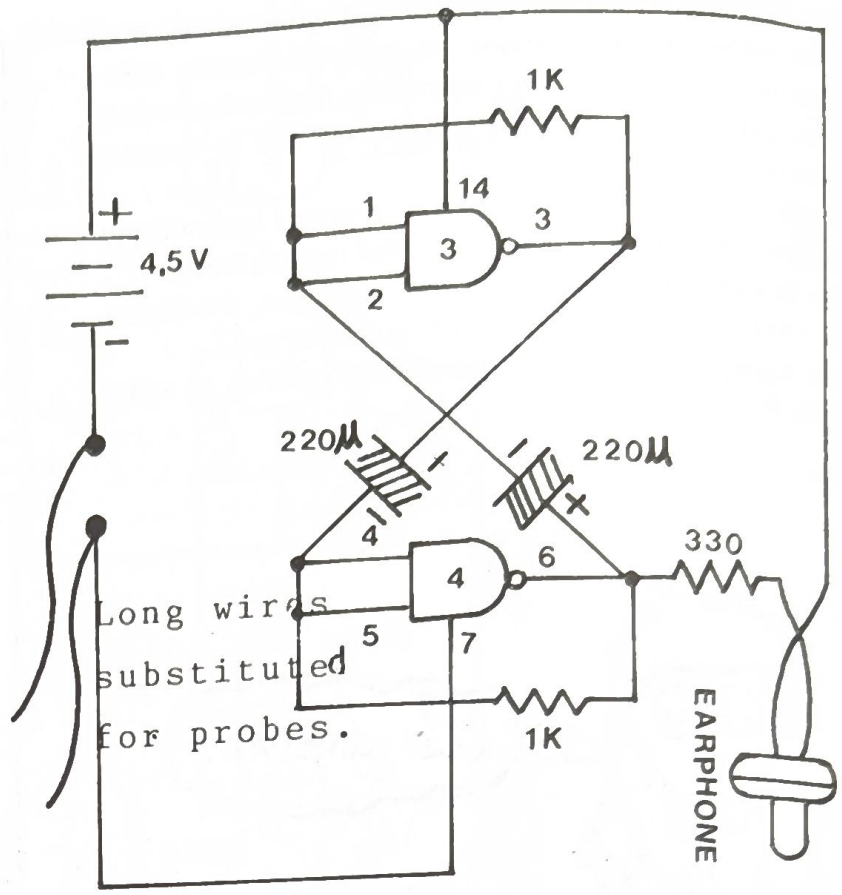

Wire Sequence

1–2–32–52
3–31–49
4–5–30–50
6–16–29–51
14–39
17– earphone
14– earphone
7– long wire
40– long wire

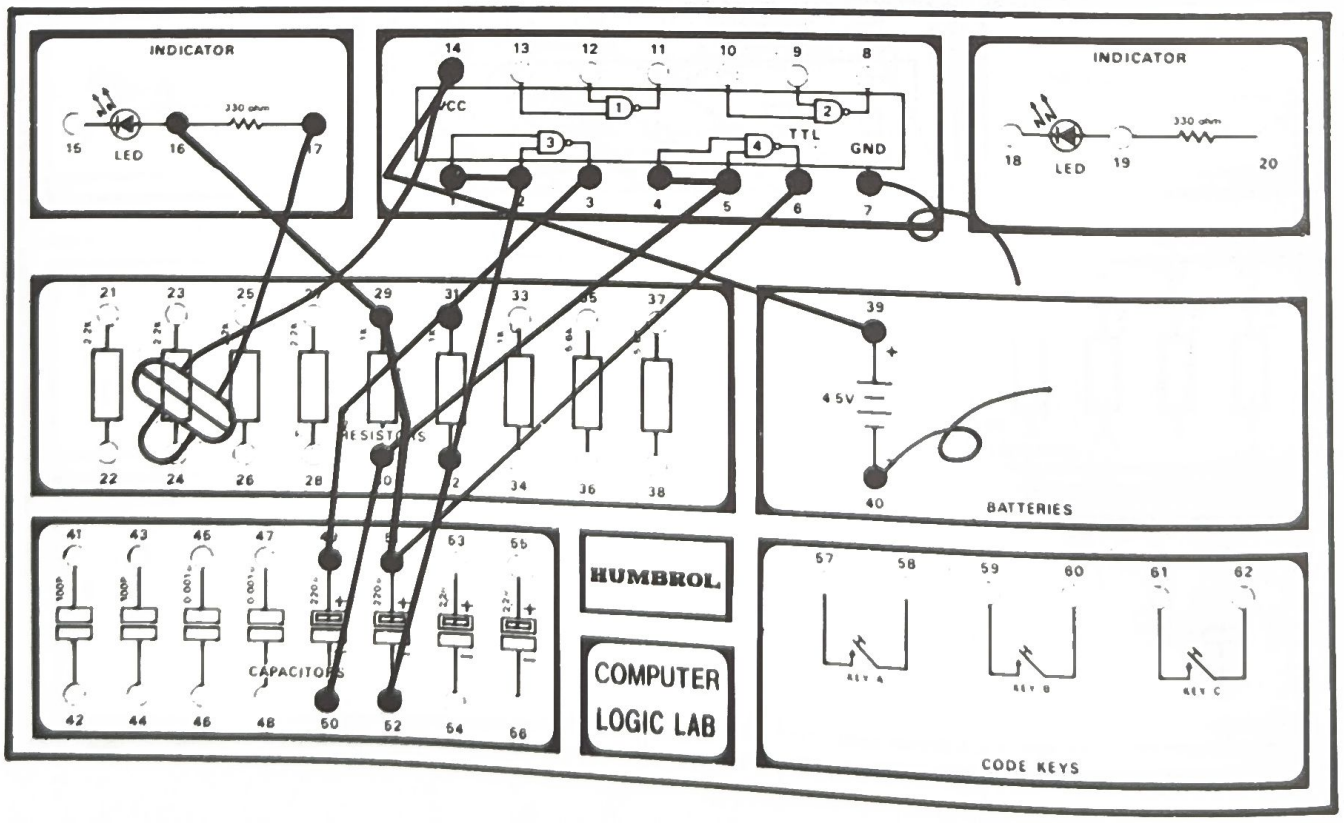

50. ONE-SHOT TONE BURST

Press trigger key A and hold it, a burst (steady output frequency of a definite time) appears at output of gate No. 1, and the earphone gives a sound. To have another burst, you should press the Reset key B, and then press Trigger key A and hold it.

Look at the circuit diagram. Gates No. 2 and No. 4 are connected as a gate control oscillator. When key A is being pressing, the capacitor charges through key A. At the very beginning of the charging, the voltage at the input of gate 3 is near zero, its output is at high level. The oscillator is enabled. But soon the voltage at the input of gate 3, will raise to such a level that its output will turn to low level, and the oscillator is disabled. When key B is pressed, the capacitors discharge through key B.

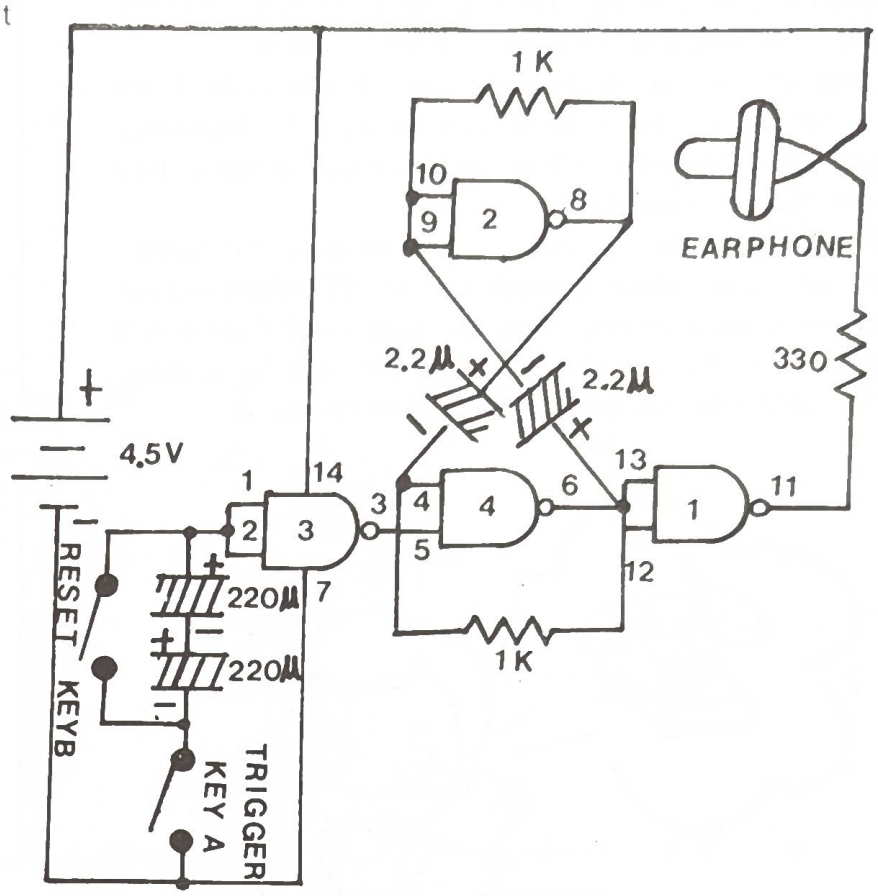

Wire Sequence

1–2–49–60
3–5
4–30–54
6–12–13–29–55
7–40–57
8–31–53
9–10–32–56
11–16
14–39
50–51
52–58–59
14– earphone
17– earphone

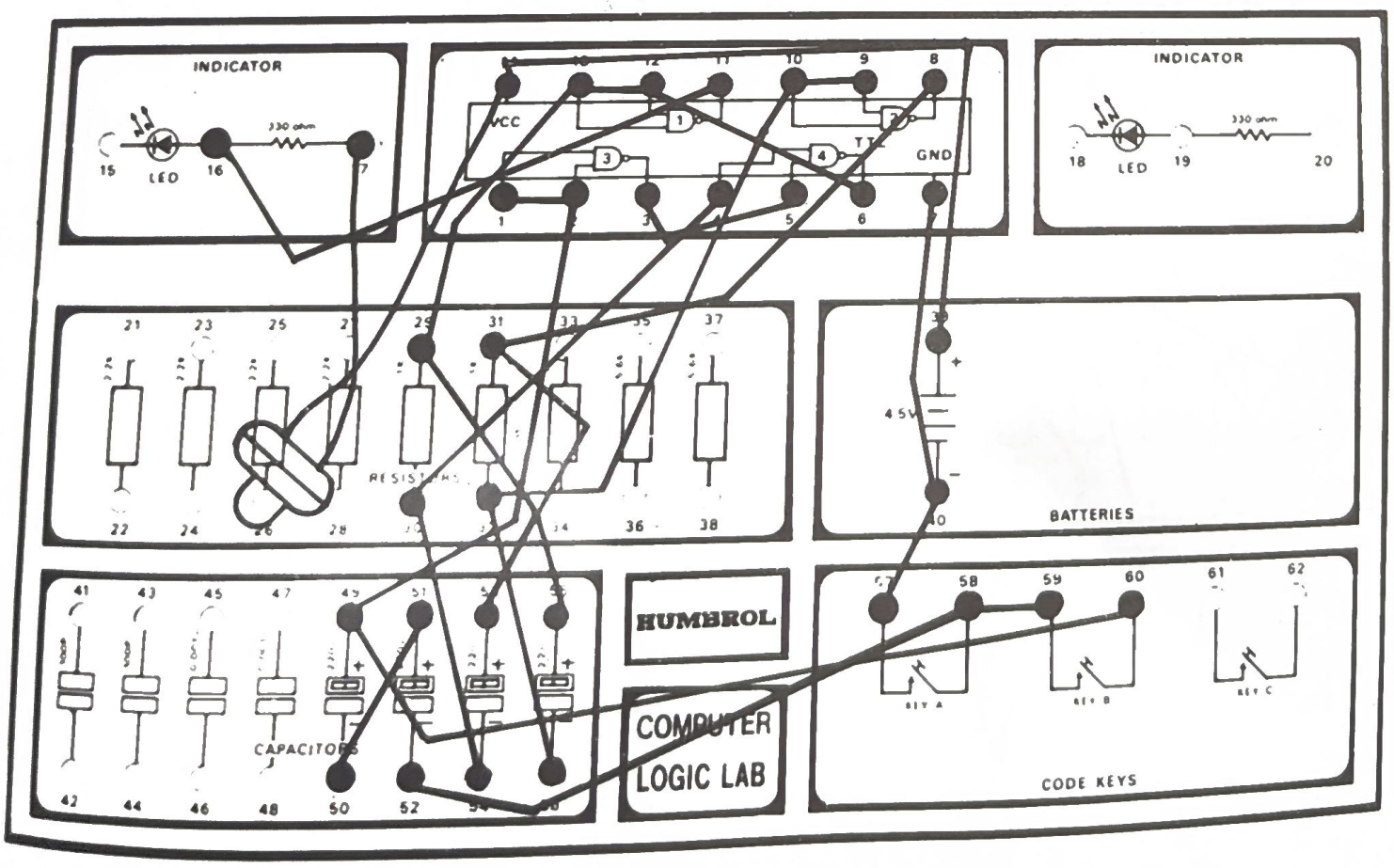

51. ELECTRONIC TELEPHONE BELL

When key A is being pressing, the LED flashs and the earphone simulates the electronic telephone bell.
Look at the circuit diagram. Gate 2 and Gate 1 are connected to be a Gate control-Audible frequency oscillator. Gates No. 3 and No. 4 are connected to be a low frequency oscillator.
When the output of Gate 4 is at high state, the audible frequency oscillator is enabled, The LED flashs and earphone gives a sound. When the output of Gate 4 is at low state, the audible frequency oscillator is disabled, the LED goes out, and earphone gives no sound.

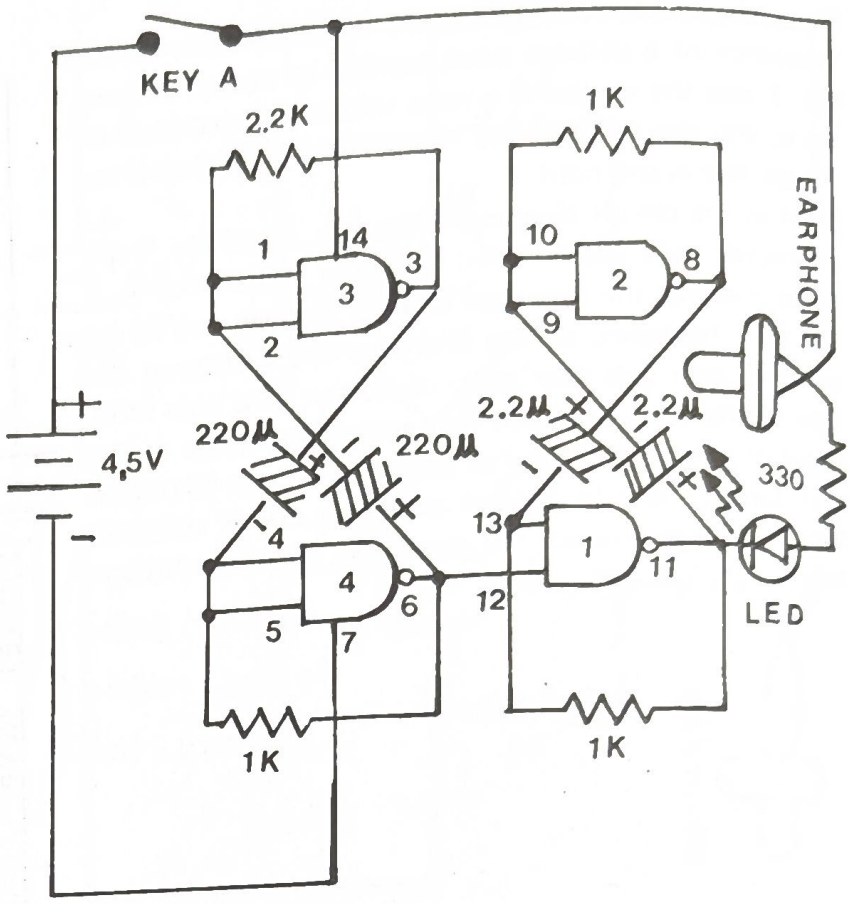

Wire Sequence

1–2–28–52	9–10–34–56
3–27–49	11–31–15–55
4–5–30–50	13–32–54
6–12–29–51	14–58
7–40	39–57
8–33–53	17 – earphone
	14 – earphone

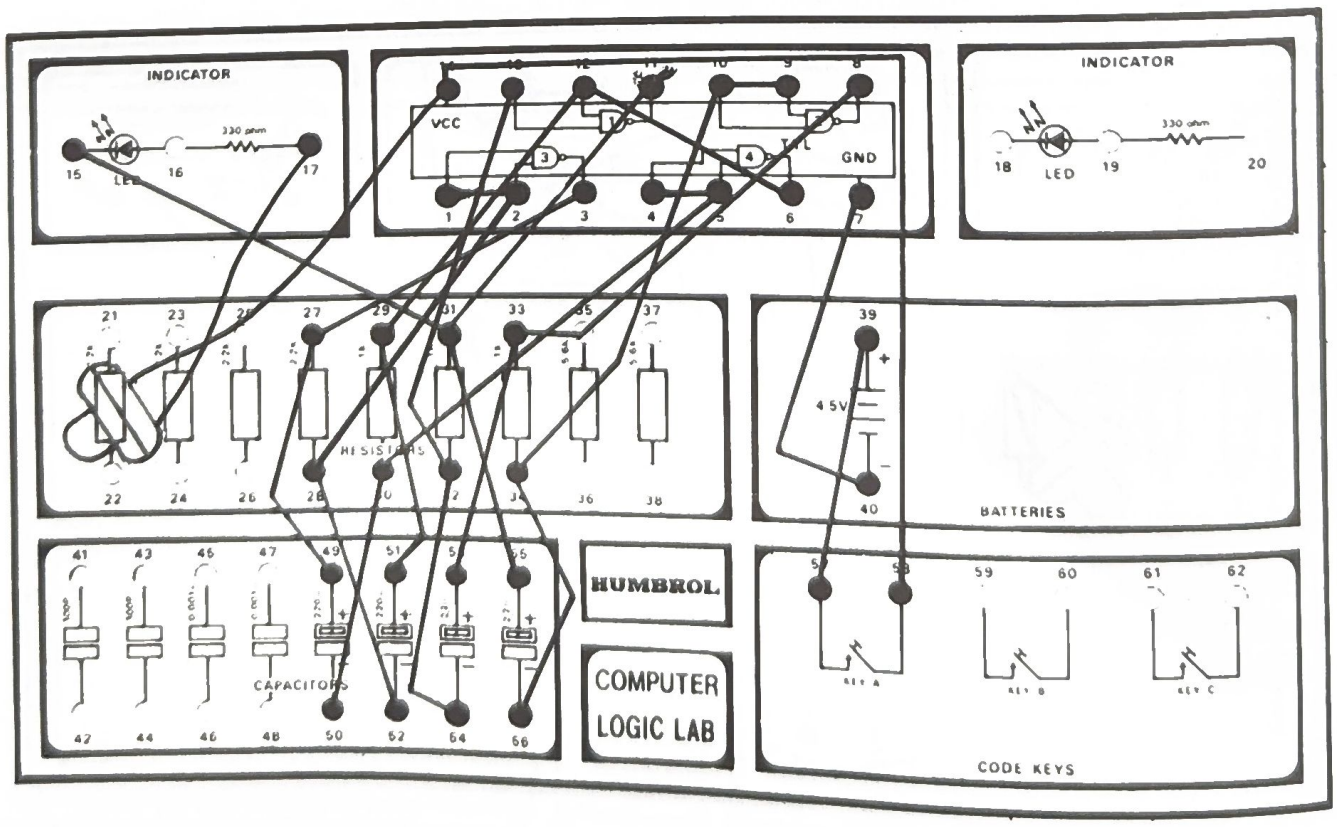

52. DIVIDE-BY-TWO

As you learned in experiment 24, there are many applications for digital logic circuits in frequency dividers. They are used in frequency counters, digital voltmeters and other circuits.

This Divide-By-Two will provide lower frequency than those from the basic oscillator.

Follow the layout diagram and wire sequence carefully. Press key B, and listen to the earphone. Release key B. Press key A. Is the frequency being heard lower than before? Notice that when key B is pressed, the frequency being heard is twice as high as when key A is pressed.

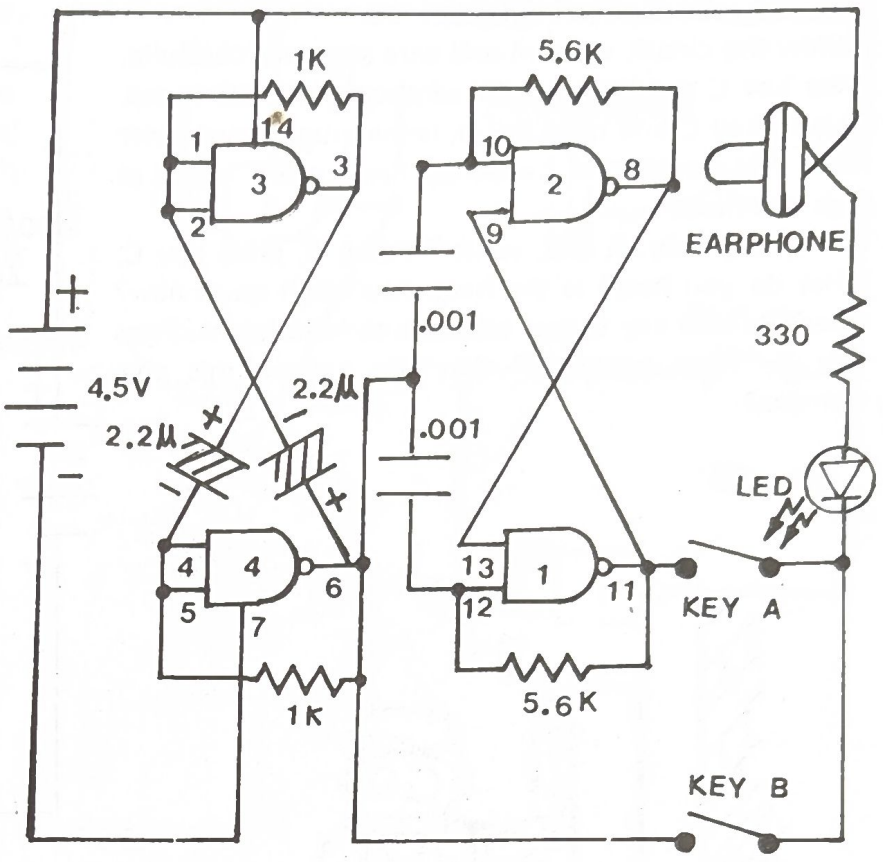

Wire Sequence

1–2–32–56
3–31–53
4–5–30–54
6–29–46–48–55–59
7–40
8–13–36
9–11–37–57
10–35–45
12–38–47
14–39
18–60–58
20– earphone
39– earphone

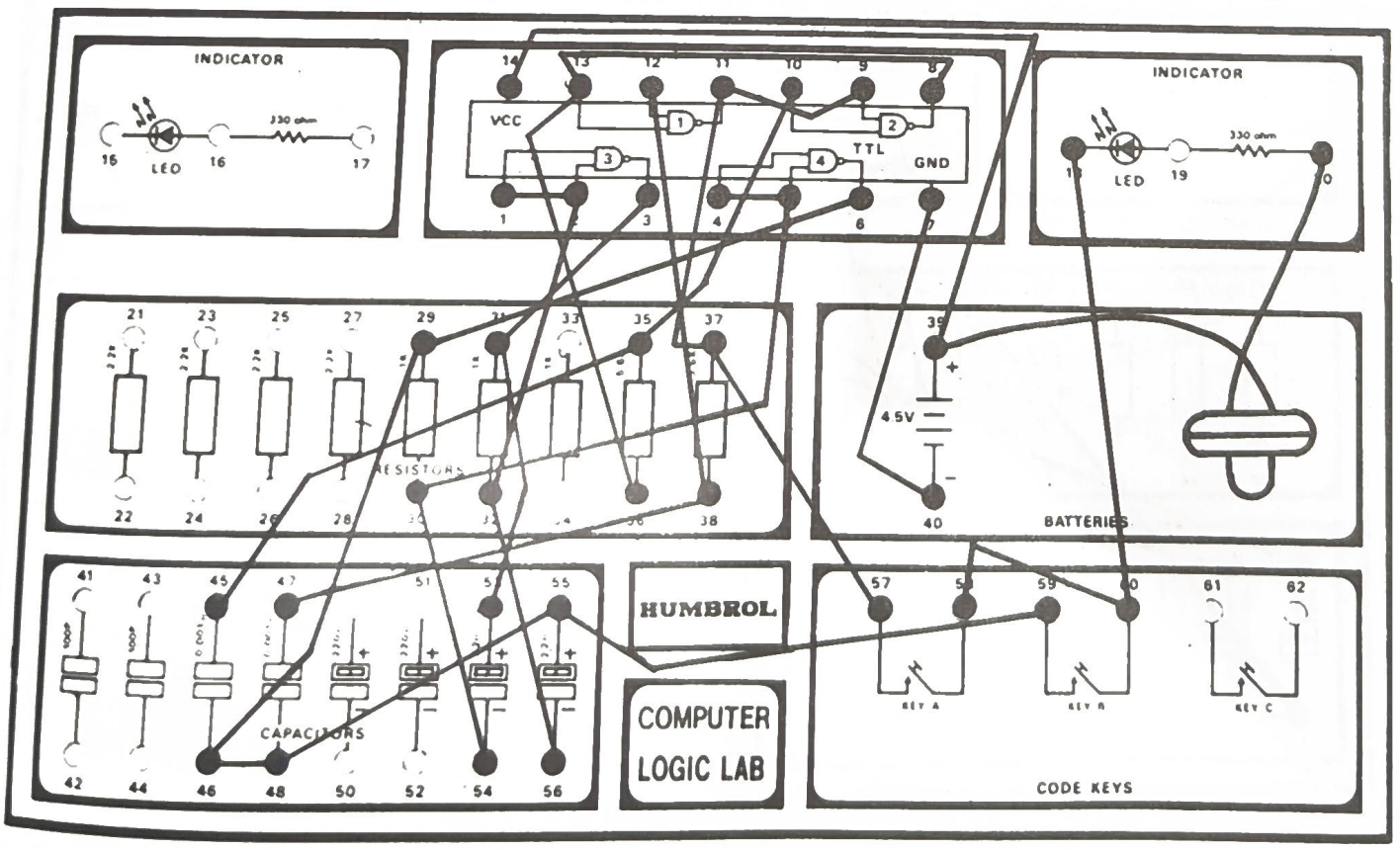

53. FOUR TONE DOOR BELL

This four tone door bell is a lot of fun.
Follow the circuit diagram and wire sequence carefully. Press key C and listen to the earphone. It emits sound. Release key C and press key B. Is the sound heard lower now? Notice that the frequency being heard is half as high as before.
Now, press key A and, while holding it, press key C. What do you hear? Is the frequency much lower now? Why? Release key C, but continue to hold key A. Press key B. What happened? Can you explain this phenomena?

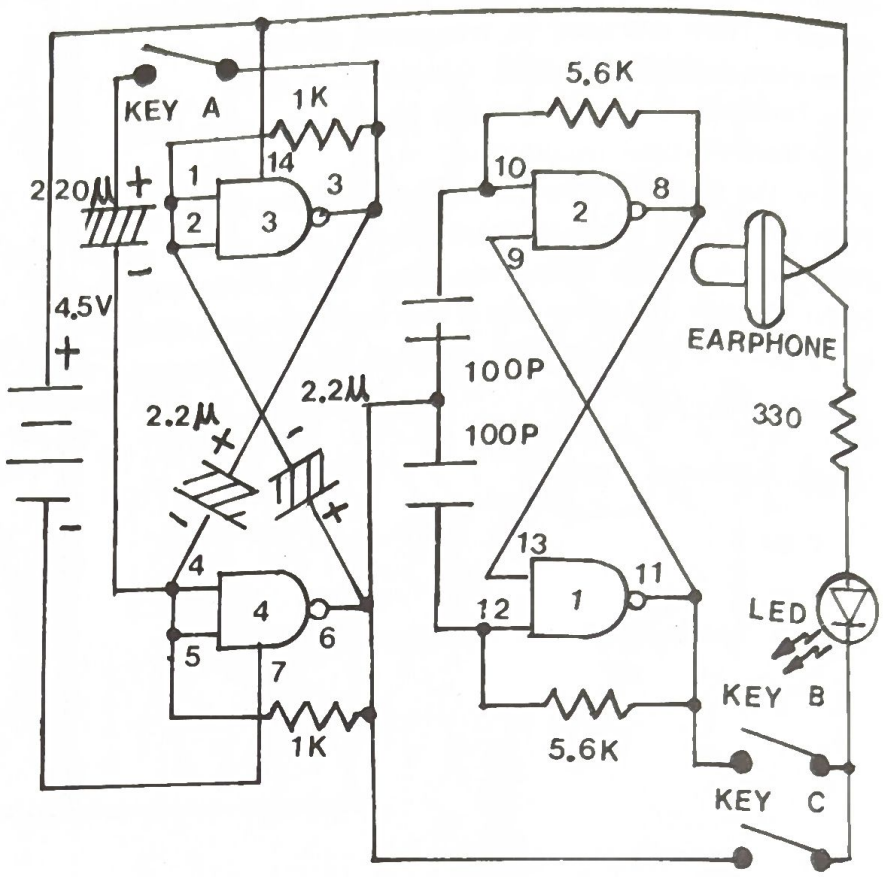

Wire Sequence

1–2–32–56
3–31–53–58
4–5–30–52–54
6–29–42–44–55–61
7–40
8–13–38
9–11–35–59
10–37–41
12–36–43
14–39
18–62–60
51–57
20– earphone
39– earphone

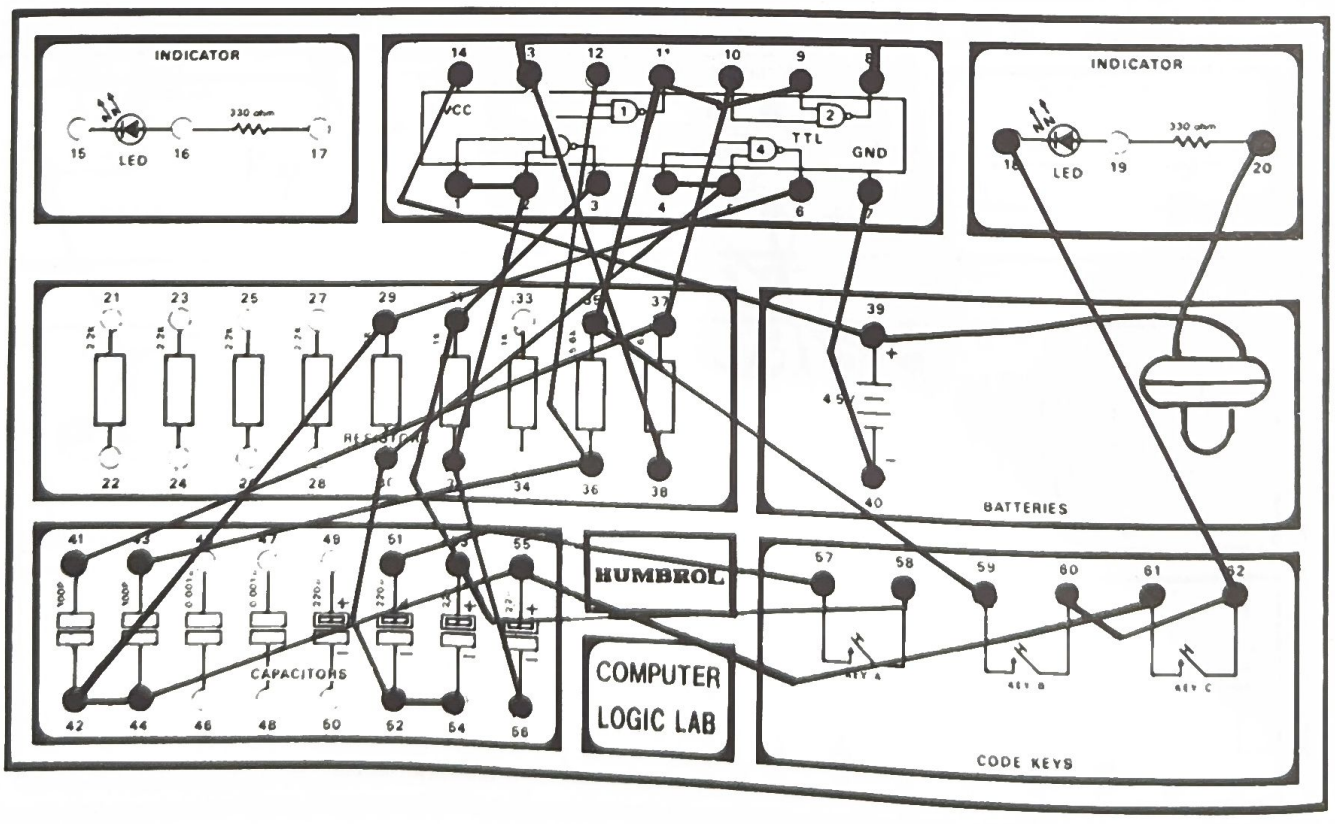

54. TTL BUFFER AS AMPLIFIER

In this experiment, we will learn how to use the buffer to "Amplify" the signal.

Look at the circuit diagram. Gate 3 and gate 4 are connected to be an oscillator. Gate 2 is a buffer, but now it is an amplifier.

After following the circuit diagram and wire-sequence carefully, press key A and listen to the earphone. Release key A, and press key B. Is the sound louder now?

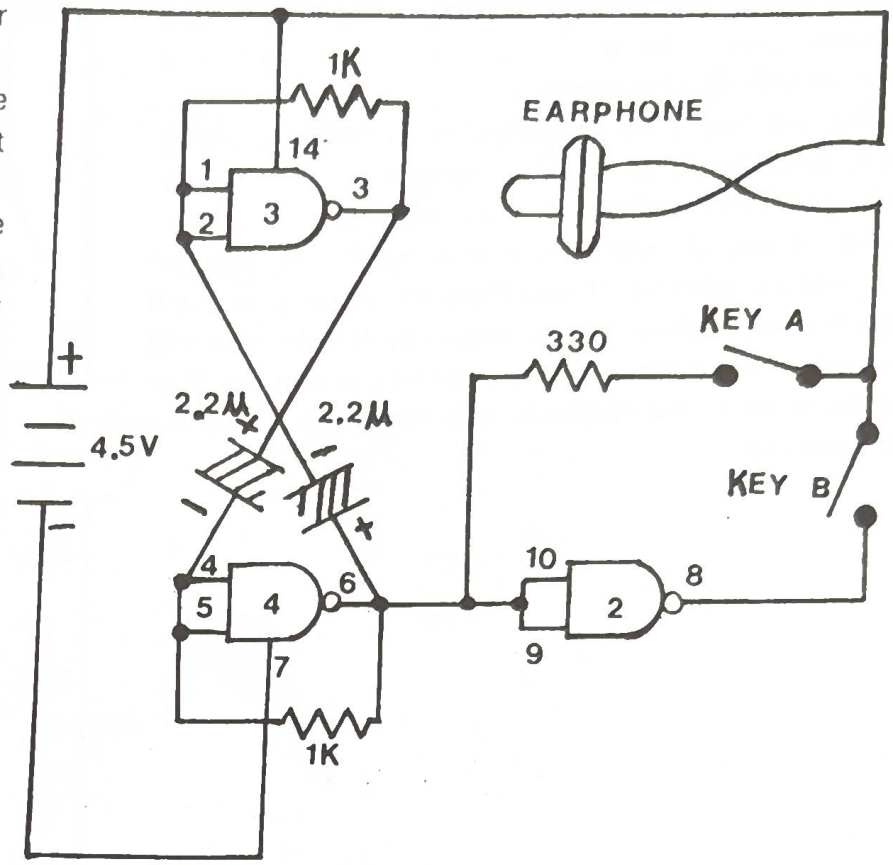

Wire Sequence
1–2–32–56
3–31–53
4–5–30–54
6–9–10–29–55–20
7–40
8–59
14–39
19–57
58–60
39–earphone
58–earphone

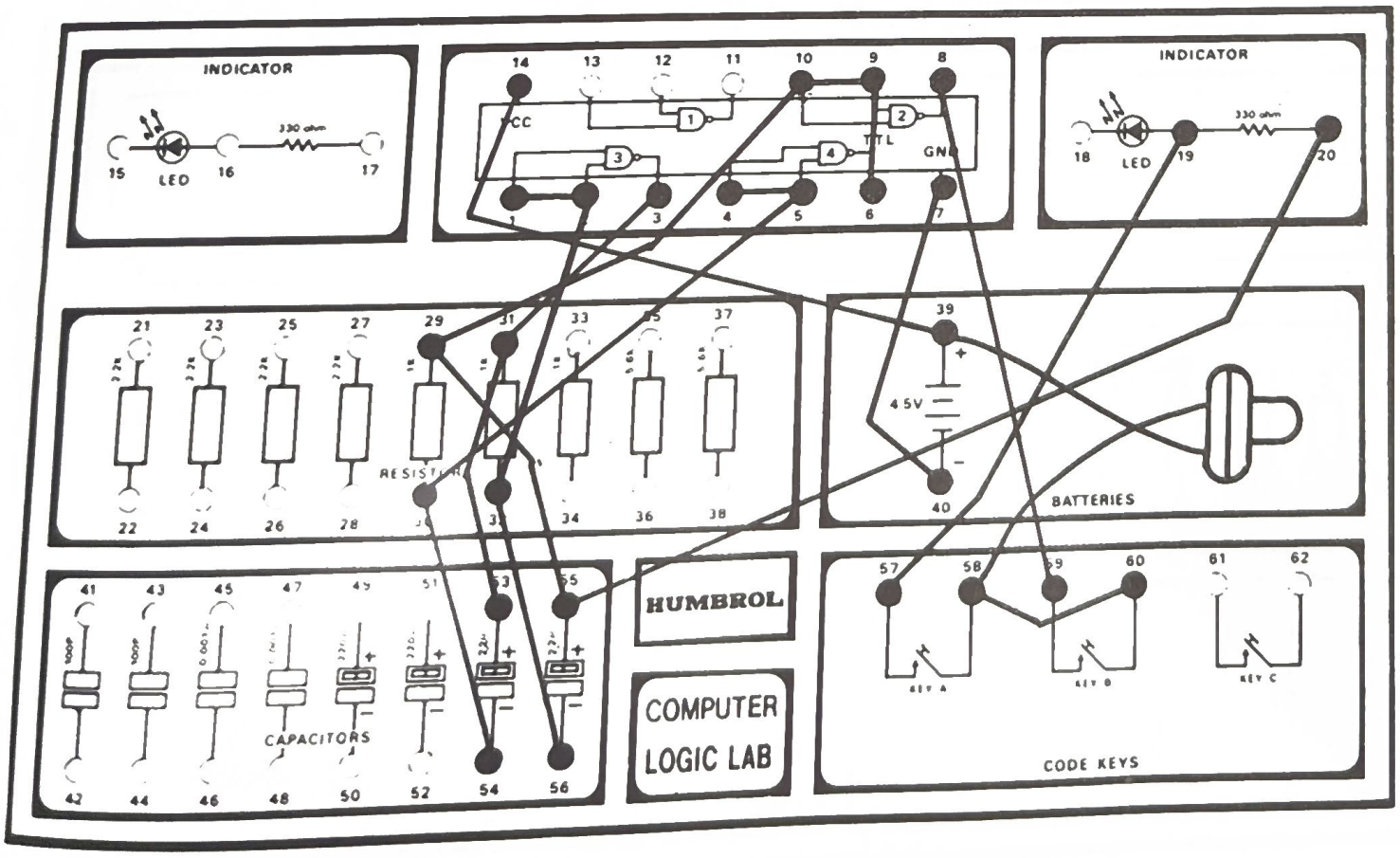

55. VISIBLE AND AUDIBLE "AND" GATE

Before conducting this experiment, it would be helpful to review experiment 6.

Look at the circuit diagram.

Gate 1 and gate 3 are connected as a control gate oscillator. Gate 2 and gate 4 are connected to be an AND gate. The earphone converts the electrical signal into sound. If you do not press key A nor key B, you will hear and see nothing. If you press key A only, you will hear and see nothing. If you press key B only, you will hear and see nothing. If you press key A and key B at the same time, the earphone will emit sound, and the LED goes on.

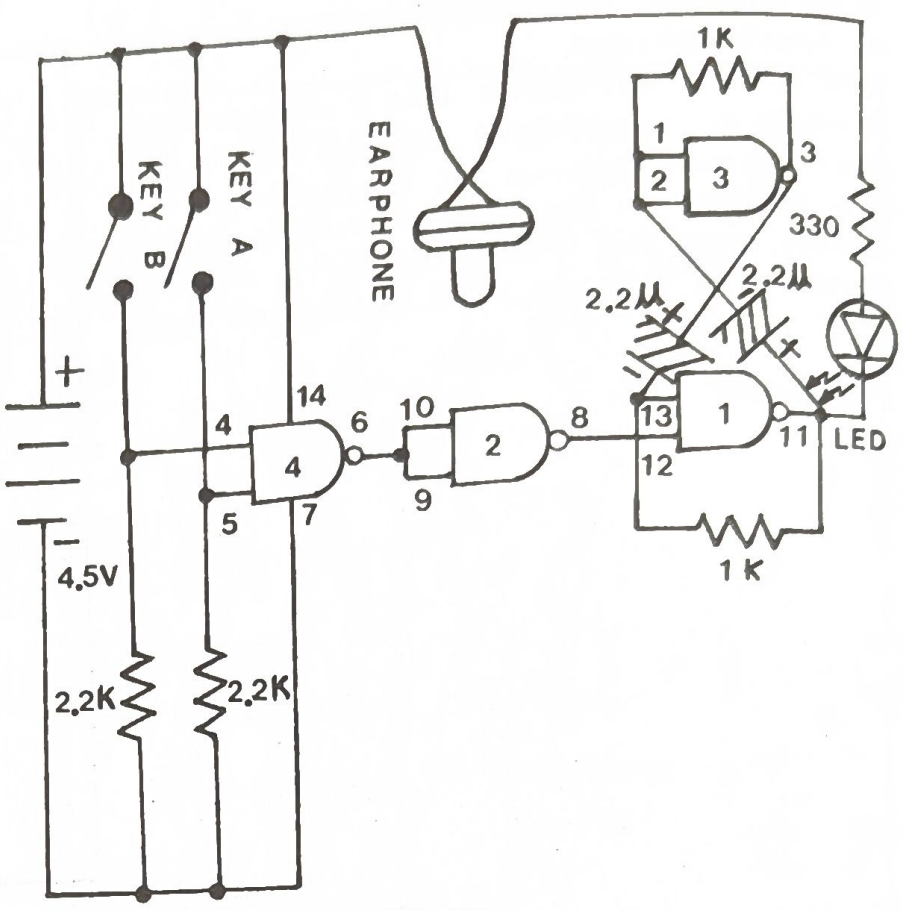

Wire Sequence

1–2–32–56
3–31–53
4–25–59
5–27–57
6–9–10
7–40–28–26
8–12
13–30–54
14–39–58–60
18–11–29–55
20– earphone
39– earphone

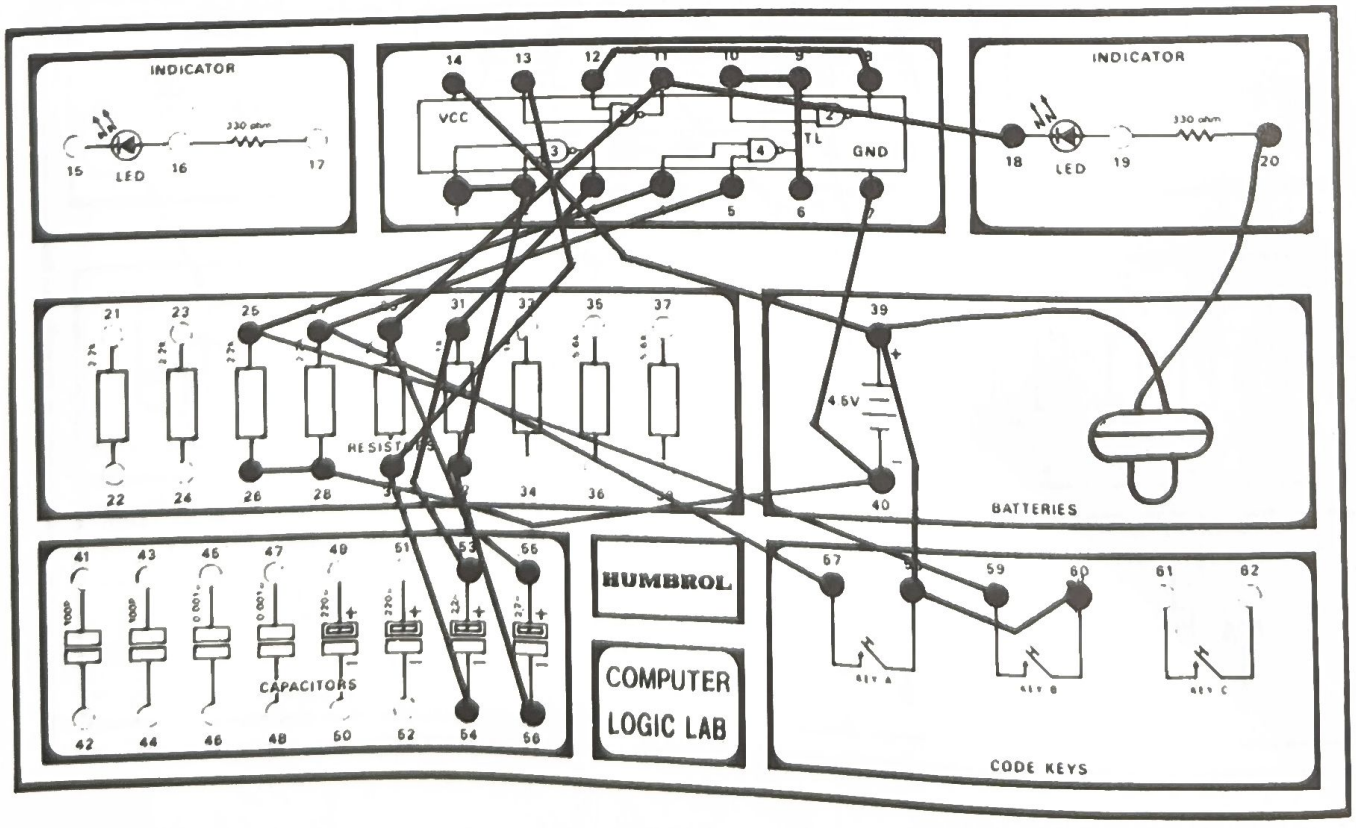

56. AUDIBLE "OR" GATE

Before conducting this experiment, it would be helpful to refer to experiment 10.

Look at the circuit diagram.

As you learned, gate 1 and gate 2 are wired to be a control-gate oscillator. The earphone converts the electrical signal into sound. Key A and key B are used as two input "OR" gates.

After following the wire sequence carefully, listen to the earphone.

When key A and key B are off, the oscillator is disabled.

When key A is ON, while key B is OFF, the oscillator is enabled.

When key B is ON, while key A is OFF, the oscillator is enabled.

When key A and key B are ON, the oscillator is enabled.

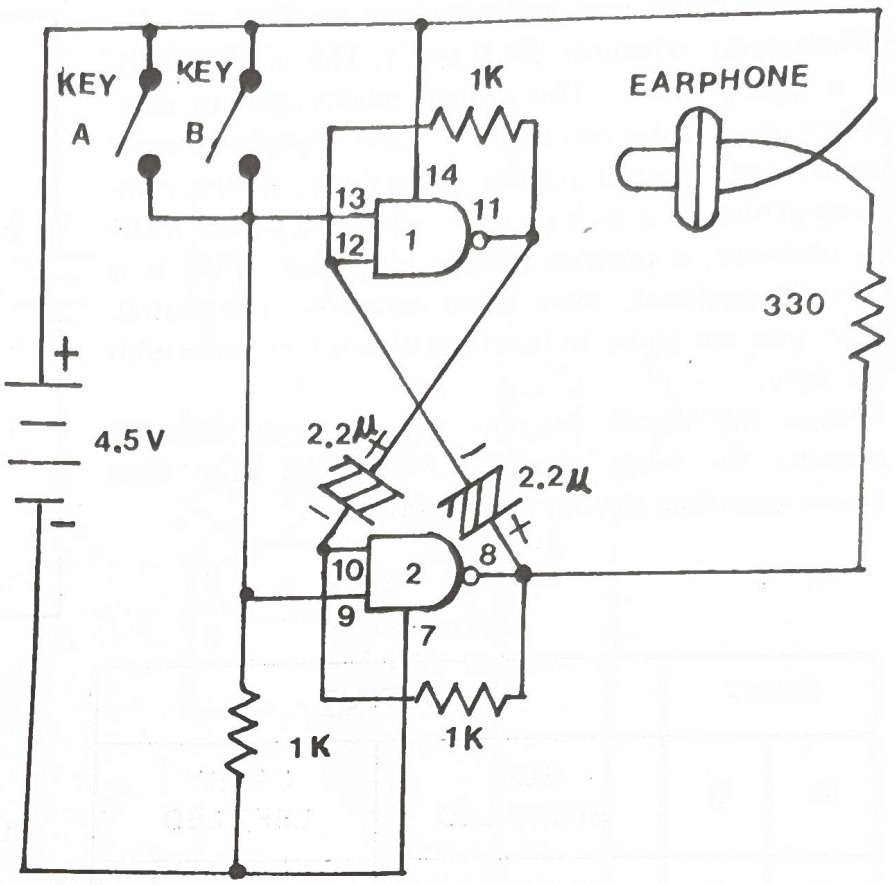

Wire Sequence

7–40–34
8–20–55–29
9–13–33–57–59
10–30–54
11–31–53
12–32–56
14–39–60–58
19– earphone
39– earphone

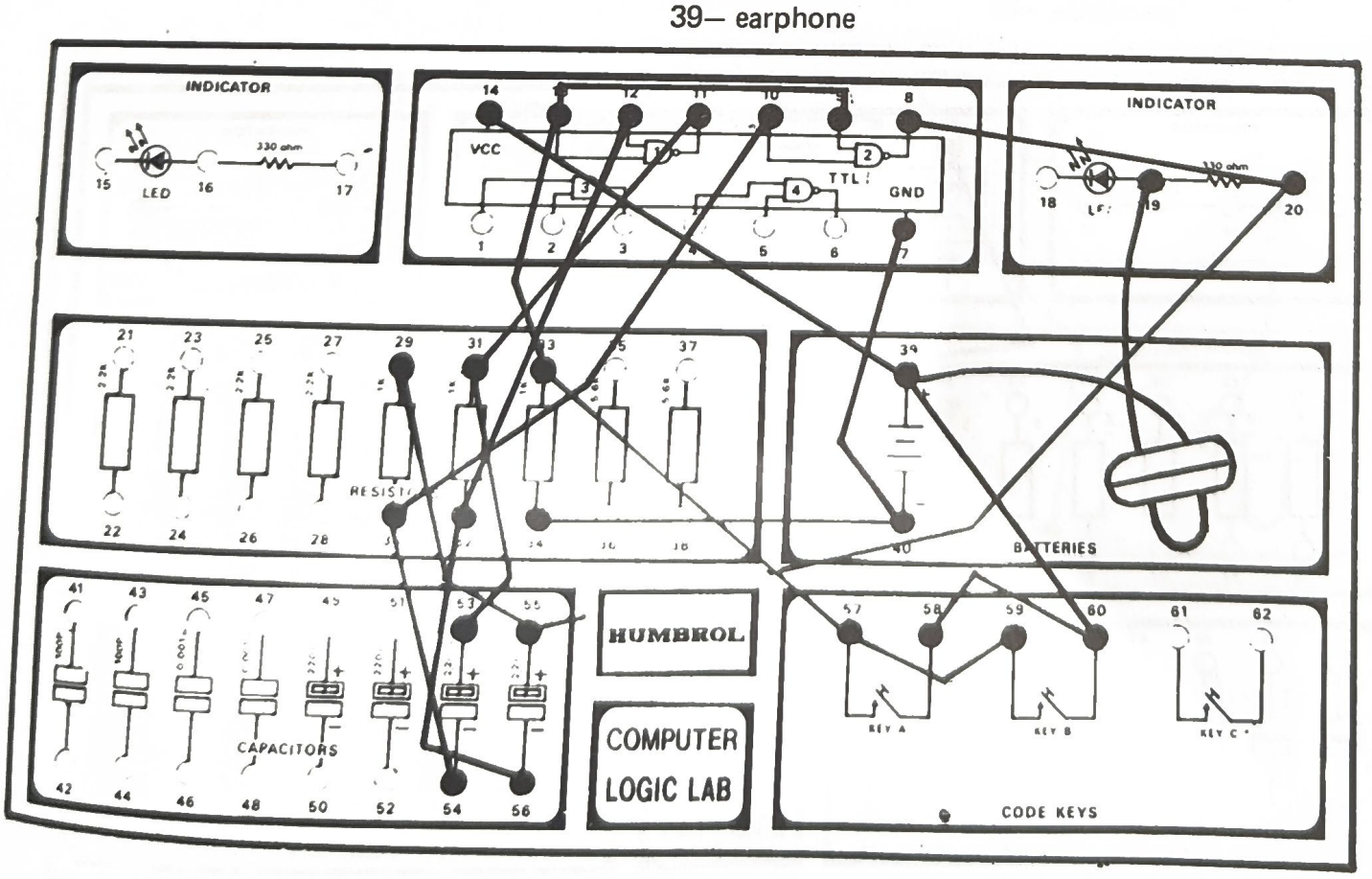

57. THE HALF ADDER

Computers count best in binary because there are only two digits to remember the 0 and 1. This is a base two, or a binary system. This system adapts well to computers because the two digits – 1 and 0 – can represent positive and neutral voltage respectively, in the computer. Think of it as a switch – when the switch is ON (1 position), a positive voltage is present, when it is OFF (0 position), there is no voltage – it is neutral. Now you are going to learn the binary half adder with no carry.

Follow the layout diagram and the wire sequence, connect the wires carefully. Fill in the truth table below according to your own observation.

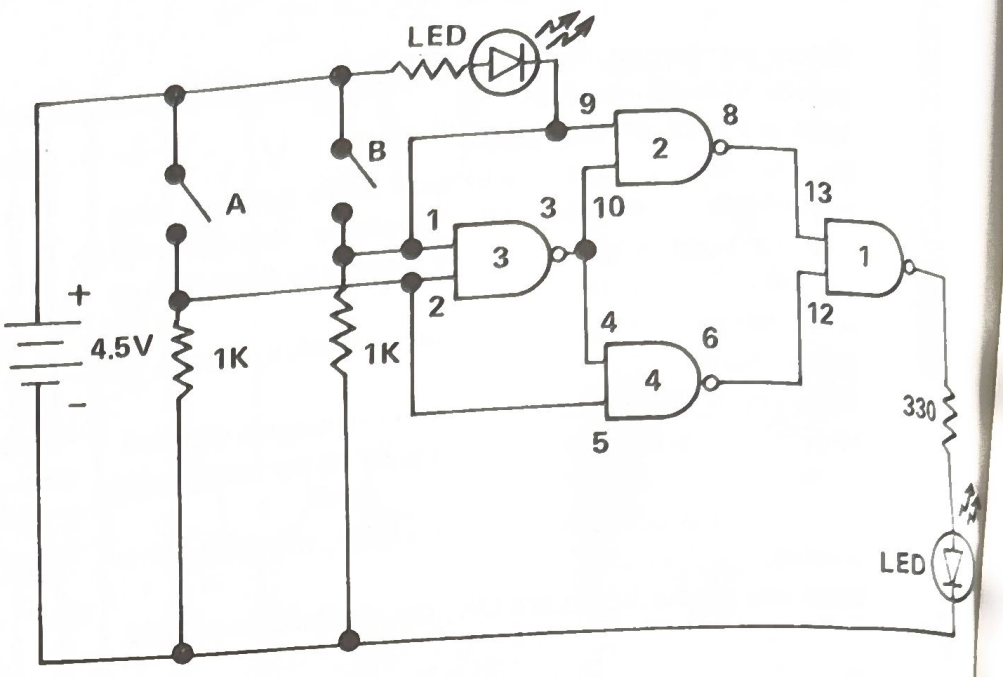

INPUT		OUTPUT	
A	B	SUM RIGHT LED	CARRY LEFT LED
0	0		
0	1		
1	0		
1	1		

Wire Sequence:

33–1–9–59
5–2–31–57
15–3–4–10
32–34–7–18–40
17–14–39–58–60
6–12
8–13
11–20

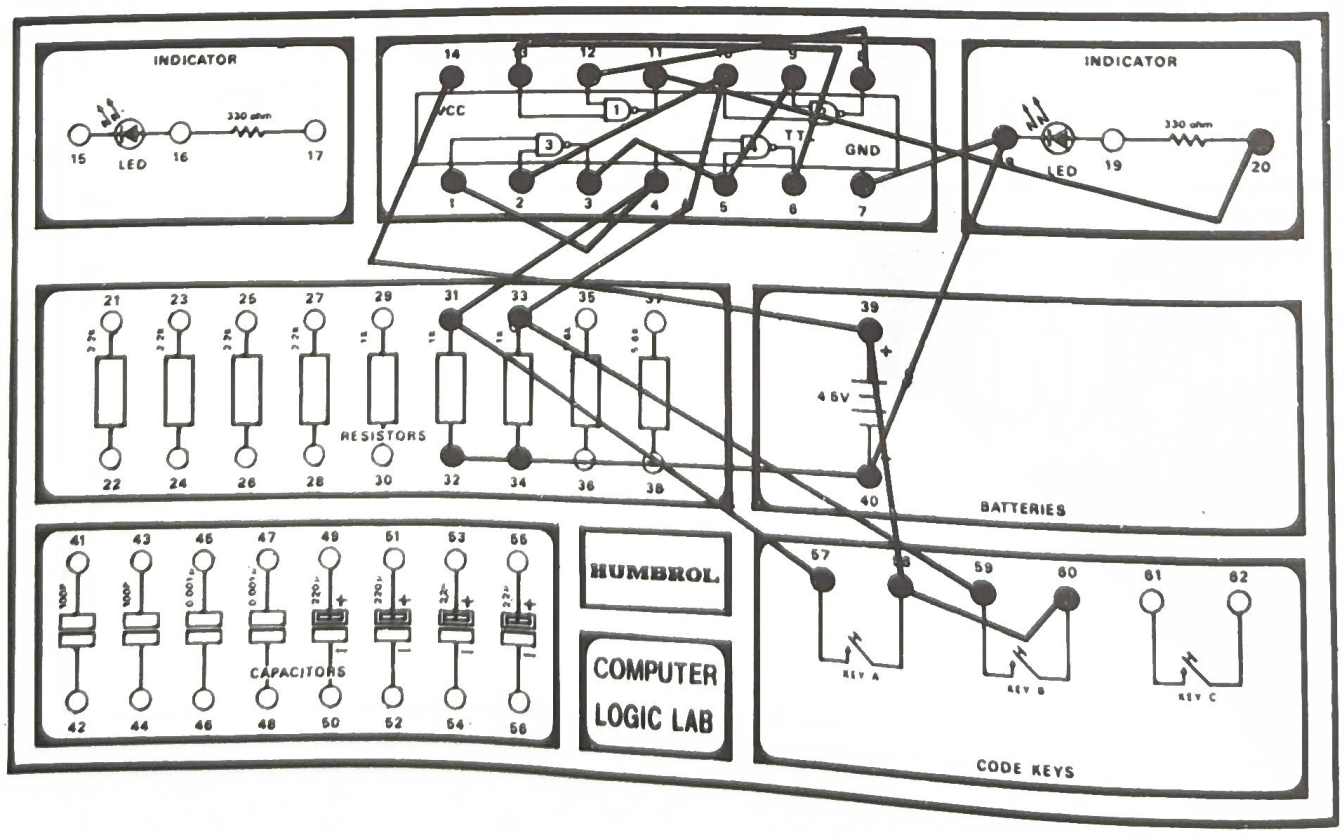

58. AUDIBLE & VISIBLE DIGITAL TRANSMISSION GATE

There are two kinds of transmission gates: the digital and analog. The Analog Gate can transmit an analog signal; the Digital gate can only transmit a digital signal (0 and 1).

Look at the circuit diagram.

Gate 3 and gate 4 are wired to be a simple oscillator.

Gate 2 is a common NAND gate (see experiment 9).

Follow the circuit diagram and wire-sequence carefully.

With enable key A open, close input key B. You will hear nothing.

With enable key A closed, close input key B. Can you hear anything?

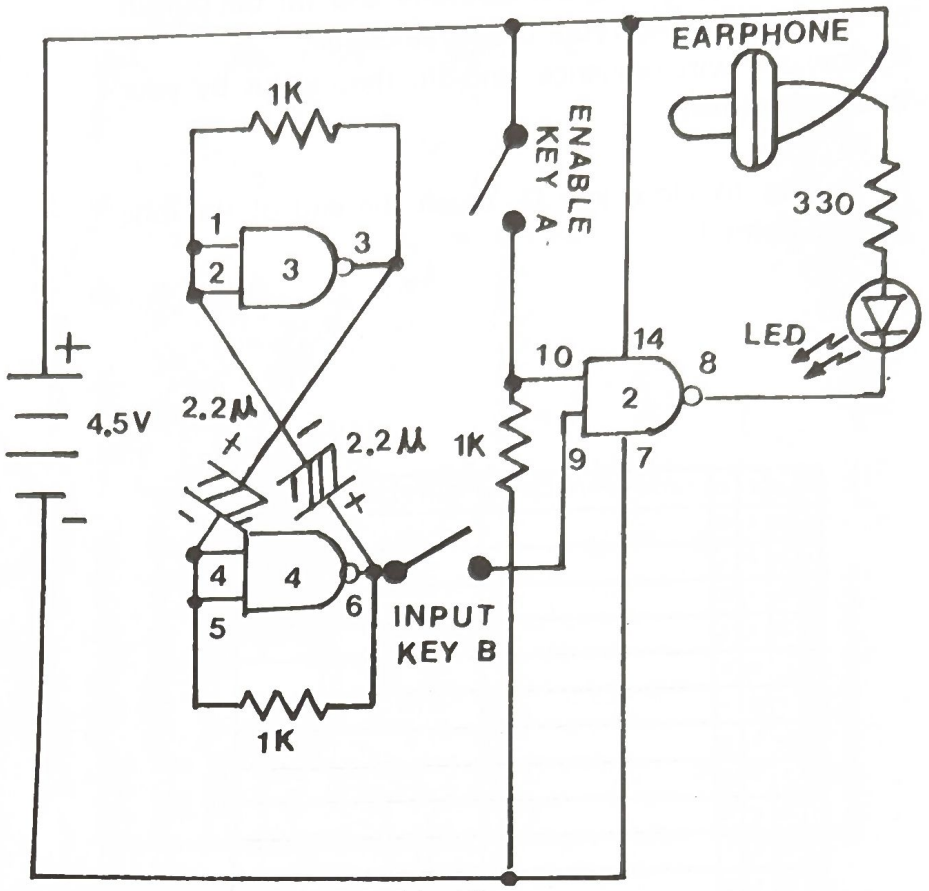

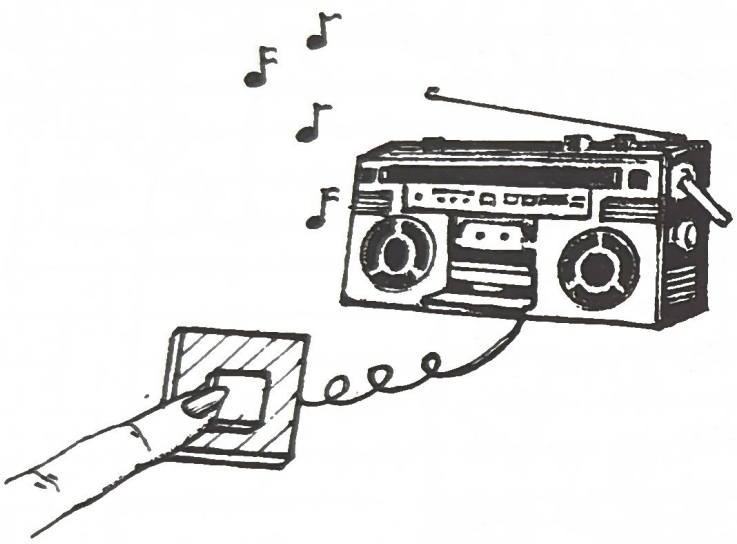

Wire Sequence

1–2–32–56
3–31–53
4–5–30–54
6–29–55–60
7–33–40
8–18
9–59
10–57–34
14–39–58
20– earphone
39– earphone

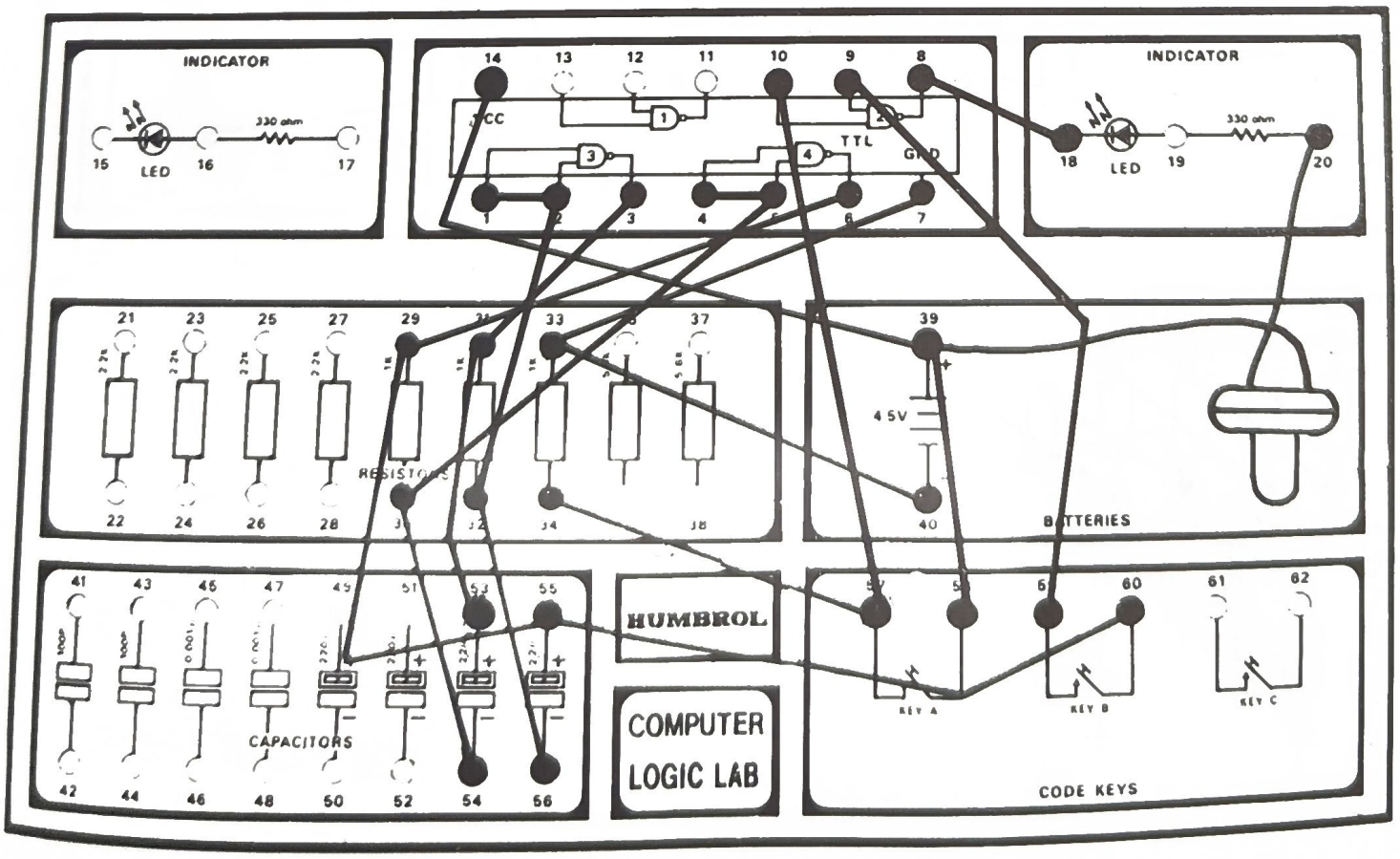

59. AND – OR GATE

Study the circuit diagram carefully and fill the output of the truth table by your own prediction.
Follow the wire-sequence, and fill the output by your own experiment.

Note that to close key D, touch the end of the long wire to point 1.

A	B	C	D	OUTPUT (PREDICTION)	OUTPUT (EXPERIMENT)
0	0	0	0		
0	0	0	1		
0	0	1	0		
0	0	1	1		
0	1	0	0		
0	1	0	1		
0	1	1	0		
0	1	1	1		
1	0	0	0		
1	0	0	1		
1	0	1	0		
1	0	1	1		
1	1	0	0		
1	1	0	1		
1	1	1	0		
1	1	1	1		

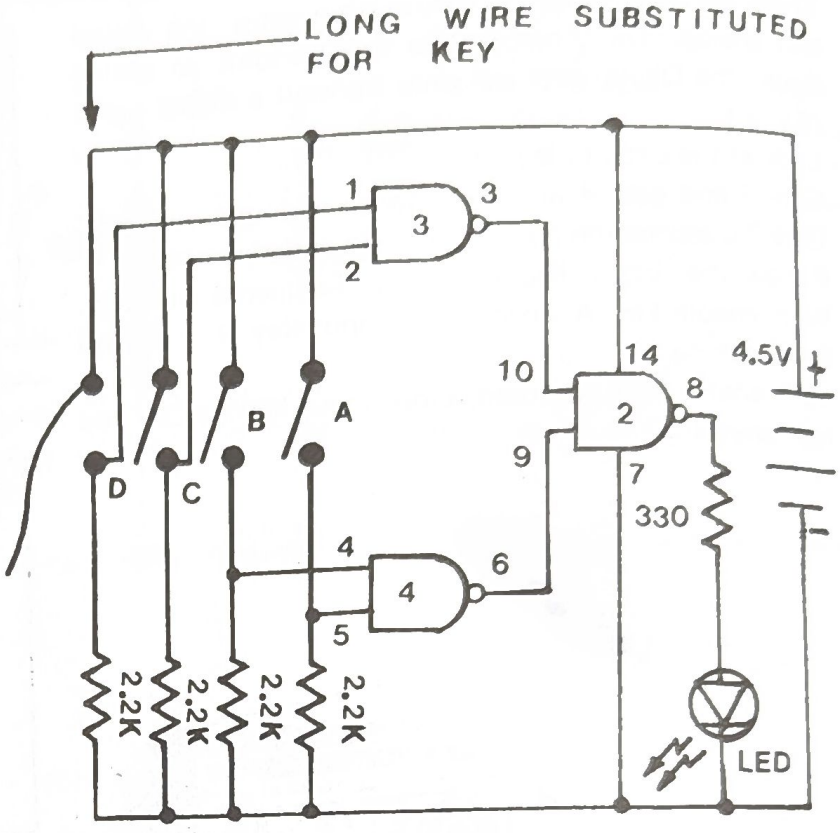

Wire Sequence

1–22
2–24–61
3–10
4–26–59
6–9
7–18–40–27–25–23–21
8–20
14–39–58–60–62
28–5–57
14 – long wire

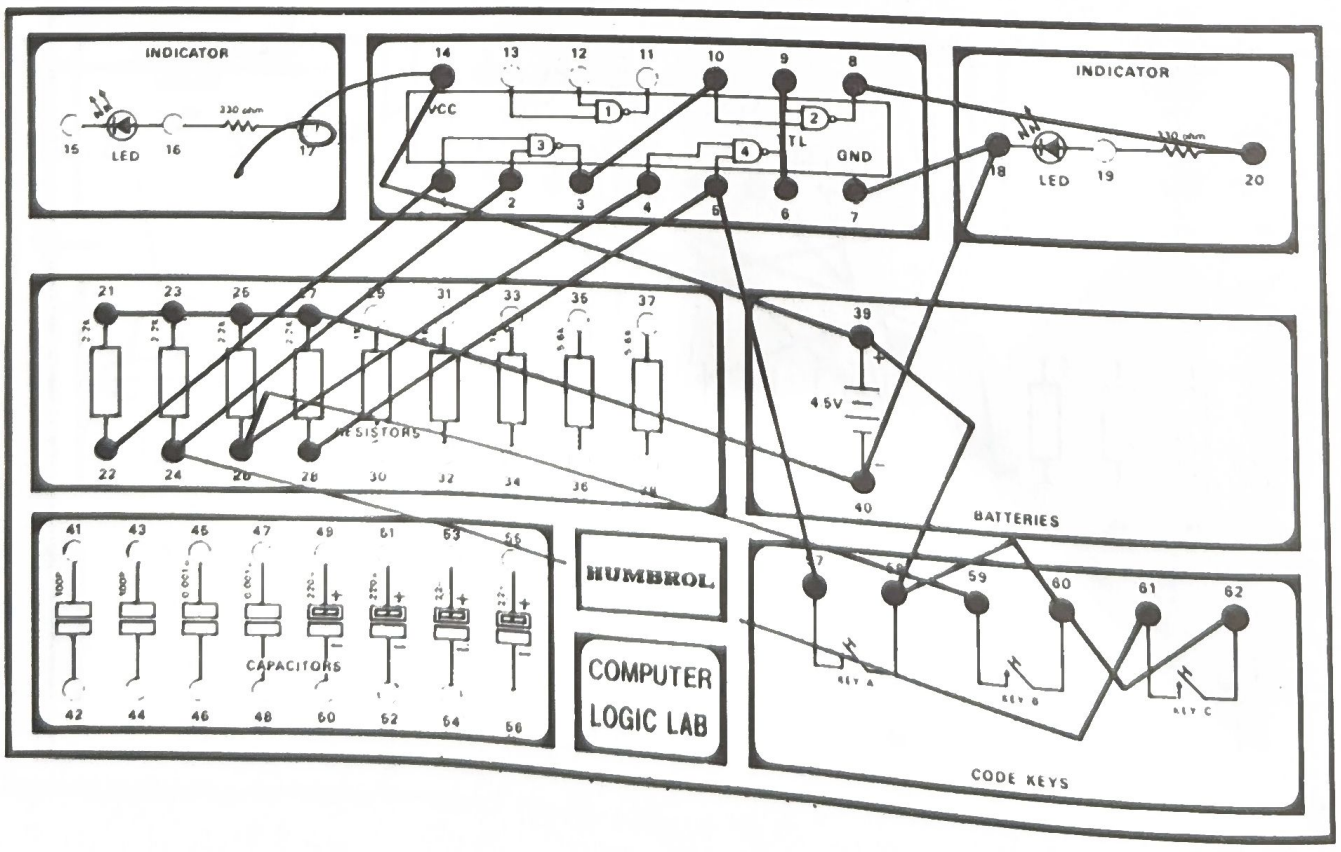

60. 4 INPUT NAND GATE

Fill in the output of the truth table by prediction.
After following the wire-sequence, fill in the output by experimentation.
Have fun!
Again, to close key D, touch the end of the long wire to point 1.

A	B	C	D	OUTPUT (PREDICTION)	OUTPUT (EXPERIMENT)
0	0	0	0		
0	0	0	1		
0	0	1	0		
0	0	1	1		
0	1	0	0		
0	1	0	1		
0	1	1	0		
0	1	1	1		
1	0	0	0		
1	0	0	1		
1	0	1	0		
1	0	1	1		
1	1	0	0		
1	1	0	1		
1	1	1	0		
1	1	1	1		

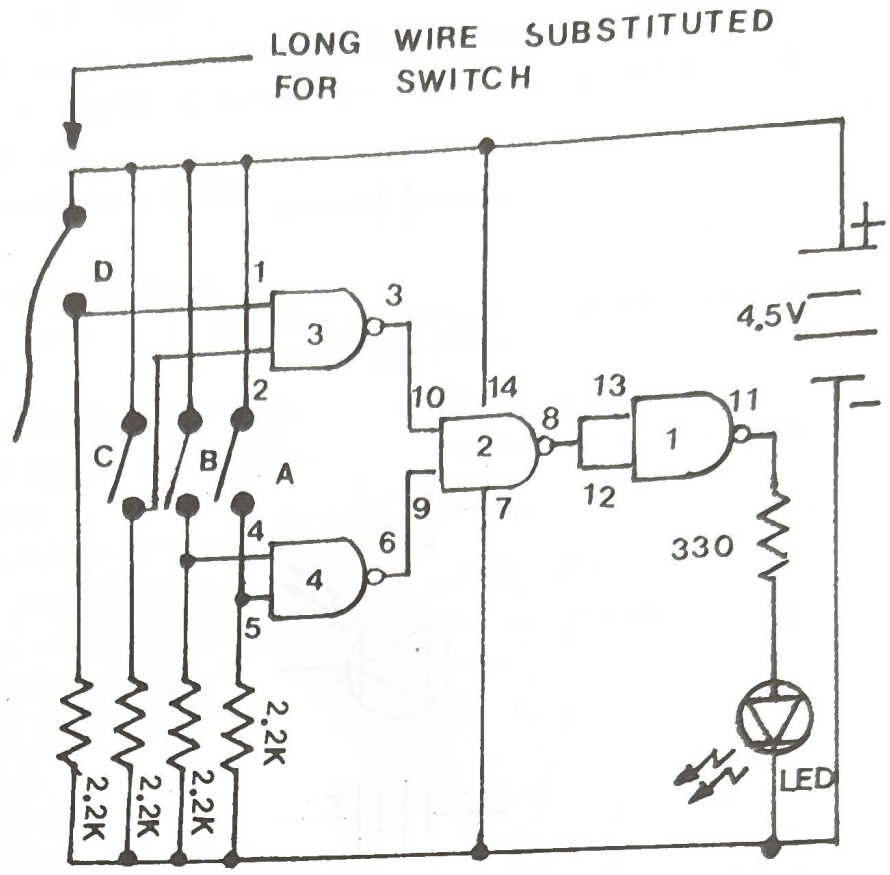

Wire Sequence
1–22
2–24–61
3–10
4–26–59
5–28–57
6–9
7–18–40–27–25–23–21
8–12–13
11–20
14–39–58–60–62
14– long wire

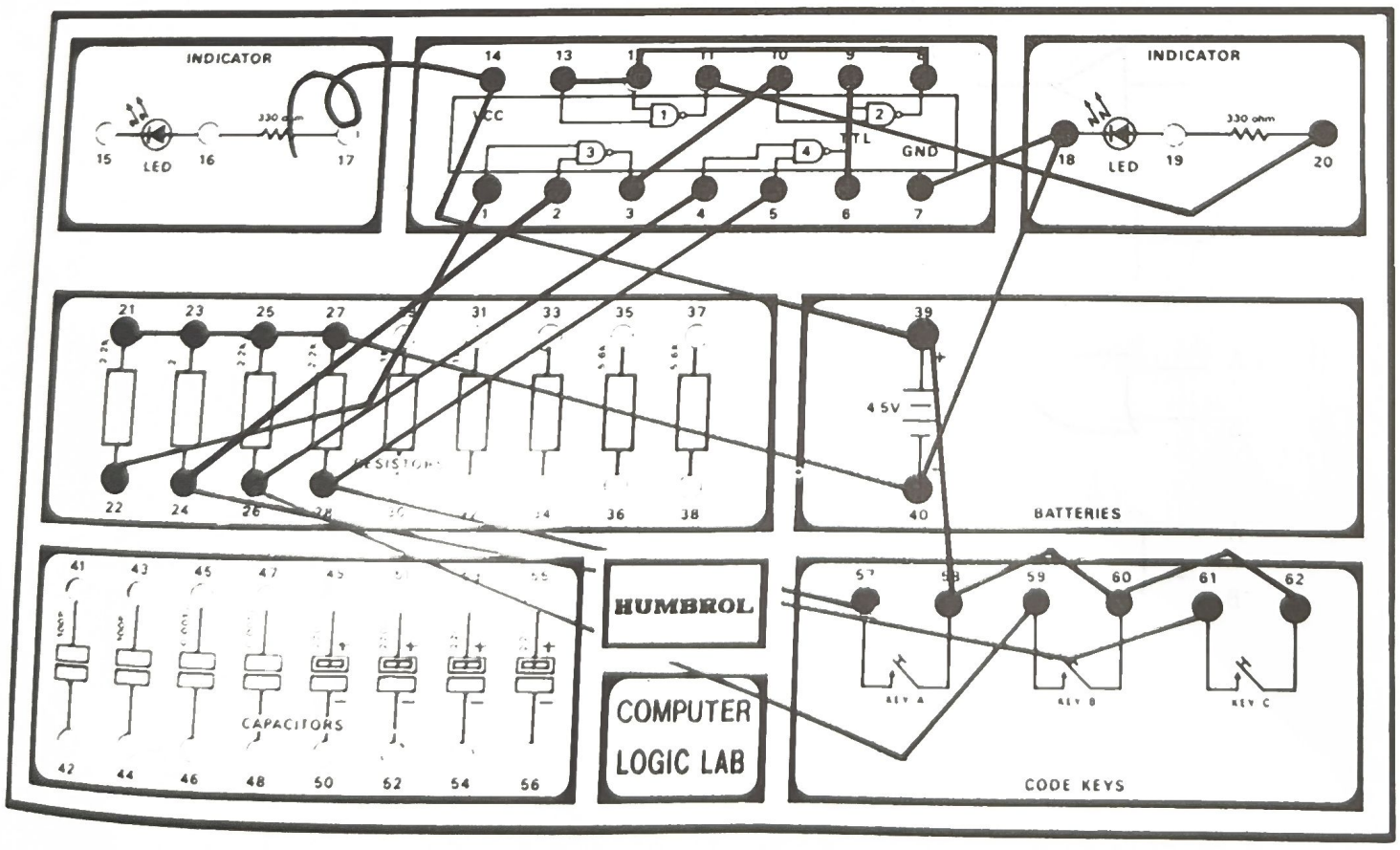

SYMBOL KEY

RESISTOR

CAPACITOR

ELECTROLYTIC CAPACITOR

DIODE

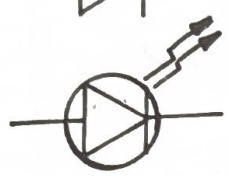
LIGHT EMITTING DIODE (LED)

BATTERY

SWITCH

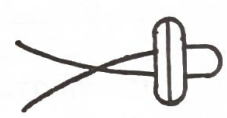
EARPHONE

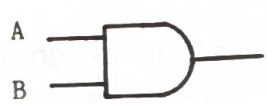

AND GATE

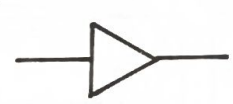
BUFFER

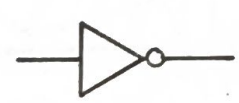
NOT GATE

OR GATE

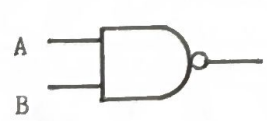

NAND GATE

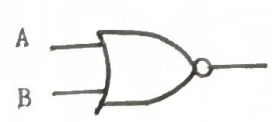

NOR GATE

GLOSSARY

Anode – the positive electrode of a device such as a diode.
Buffer – an isolating circuit used in a digital computer.
Capacitor – a device that can store an electrical charge. Current will flow through a capacitor only when the voltage across the capacitor changes.
Cathode – the negative electrode of a device such as a diode.
Data Flow – a current through a logic circuit.
Diode – a device that lets current pass in only one direction.
Frequency – The number of complete cycles per unit of time for a periodic quantity such as alternating current or sound waves.
Forward-Biased – A bias voltage applied to a diode that causes increased current flow.
Gate – a circuit having an output and several inputs so designed that the output is energized when a certain combination of inputs are present.
GND – ground. In this console, the negative terminal of the battery.
Hz – hertz. The unit of measure for frequency that is equal to one cycle per second.
Integrated Circuit – a packaged collection of circuits which are fully formed and connected in microscopic dimensions on a single silicon chip.
LED – Light Emitting Diode. A diode that emits light when current passes through it.
Logic State – zero or one.
Ohm – the unit of electrical resistance, equal to the resistance of a circuit in which the electromotive force of one volt maintains a current of one ampere.
Oscillator – a circuit that generates alternating current at a frequency determined by the values of its components.
Resistor – a device that obstructs the flow of electricity.
Reversed-Biased – A voltage applied to a diode resulting in little or no current flow.
Schematic – a symbolic drawing of an electronic circuit.
SCR – Silicon Controlled Rectifier. A device that can be triggered into conduction in only one direction.
SINK – the component or network into which energy (usually current) flows.
SPDT – single pole, double throw switch.
Timer – an electric circuit used to perform switching operation at pre-determined time intervals.
555 Timer – a widely used timer.
TRIAC – a bidirectional rectifier (essentially two SCRs in parallel) that function as an electrically controlled switch for ac loads and having a structure that can be triggered into either forward or reverse conduct.
Troubleshooting – finding problems in an electronic circuit and repairing same.
Volt – the unit of electromotive force, or difference of potential, which would cause a current of one ampere to flow throgh a resistance of one.
VOM – volt-ohm meter. A device that usually measures resistance, voltage and current.